REPLACEMENT PARTS

FOR

TRIUMPH

MOTORCYCLES

COMMENCING
ENGINE No.
011116

SEPTEMBER, 1957

5T	-	SPEED TWIN
6T	-	THUNDERBIRD
T100	-	TIGER 100
T110	-	TIGER 110
TR5	-	TROPHY
TR6	-	TROPHY

TRIUMPH ENGINEERING COMPANY, LIMITED
MERIDEN WORKS, ALLESLEY
COVENTRY

Telegrams (for Spares)
"Trusty, Coventry"

Telephone
Meriden 331

ISSUE No. 14

Ref. 404/58

Published, February, 1958

PREFACE

BEFORE ordering parts for your machine, please read very carefully the instructions contained in the next paragraph. In a large number of cases, the information given in orders is not sufficient to enable us to identify customers' requirements with certainty. Delay is frequently occasioned by our having to refer the order back for further particulars before we can supply.

HOW TO ORDER. Every part is indicated by number, and this should be quoted together with the description. In order to assist customers, dimensions have been given in many cases where parts are similar. Parts where possible have been listed in order of assembly and a number of the illustrations show the assembly order also. With these aids there should be no difficulty in identifying the parts you require. Always head your order with the engine number, stamped on the drive side of the crank case underneath the cylinder flange, together with the prefix letters. Use a separate sheet for your order if you are sending a letter as well.

SPECIMEN ORDER

25/6/58

To Triumph Engineering Co. Ltd.,
Spares Department,
Meriden Works,
Allesley,
Coventry.

Engine No. 5T-200000

Please supply :—

1 - CP.29/20 - Piston Assy. + .020"
1 - E2899 - Guide, inlet valve

***Send C.O.D.**

Wm. Smith,
1a, Ewell Avenue,
Ewell, Surrey.

**For terms of business see page 3.*

TELEGRAPHIC ORDERS. Orders by telegram should be addressed to "Trusty 60221 Coventry". They are then telephoned to us, which prevents delay in delivery. It is only necessary to quote part numbers in telegraphic orders, the description can be omitted.

PATTERNS AND PARTS FOR REPAIR. It is not necessary to send patterns if the part number is quoted. The sending of patterns often delays the order as parcel post or rail takes longer than letter post.

Parts sent to Coventry for repair, replacement or as patterns should bear the sender's name and address and clear instructions should accompany the parts. All parts must be forwarded carriage paid and care should be taken to ensure that all remittances are sent separately and not enclosed with the parts. Fragile units such as cylinders, etc., should always be boxed to avoid damage in transit. Complete machines should have all fitments such as horns, driving mirrors, tools, etc., removed by the sender before despatch, as it is impossible for us to accept responsibility in the event of loss in transit. We are always pleased to give estimates for overhauling and repairs, but should an estimate not be accepted, a charge will be made covering cost of dismantling and re-assembling, if carried out.

Communications relating to Parts should be addressed to the SPARES MANAGER and for repairs, guarantee claims and technical advice to the SERVICE MANAGER, Triumph Engineering Co. Ltd., Meriden Works, Allesley, Coventry. In order to facilitate quick reference, the quoting of any number, invoice number or reference from previous communications is of essential importance. **Accessories not of our manufacture should be sent direct to the actual makers, whose names and addresses appear on Page 90.**

WHERE TO OBTAIN. Triumph Spare Parts may be obtained from any Triumph Dealer, and we recommend our customers to place their orders with the Triumph Dealer in their district, as we do not normally supply direct. When parts not usually asked for are required, and for which the Dealer may have to wire or obtain specially, the postage or carriage incurred becomes payable.

We are not able to supply Transfers as originally affixed to Triumph Motor Cycles, but we are at all times willing to supply a transfer denoting that the machine is of genuine Triumph manufacture, provided the Frame and Engine prefix letters and numbers are quoted.

Customers are warned against the risk incurred by purchasing parts that are not of genuine Triumph manufacture. This risk is eliminated if parts are ordered as instructed, either from our recognised Dealers, or direct from the Spares Department, Meriden Works, Allesley, Coventry.

TERMS OF BUSINESS

THE most convenient method of paying for Spare Parts is by the C.O.D. system. By this method you pay the postman for the goods when he delivers them to you. As the minimum C.O.D. collection fee is 1/2, only goods to the value of 2/- and over can be sent by this system. We do not despatch goods by rail C.O.D.

Where goods are not sent C.O.D., cash must accompany the order. All remittances should be made payable to the Triumph Engineering Co. Ltd., and crossed "Barclay's Bank Ltd." if in the form of Postal Order or cheque. Letters containing currency notes must be registered.

Should a remittance be forwarded by telegraphic money order, the name and address of the sender must be inserted in the space provided on the Post Office requisition form for a private message from remitter to payee. Unless this is complied with the Post Office omit such information from the telegram and we are not then in a position to trace the sender.

Postage, carriage and packing is charged at 5% on the value of the goods, minimum charge 1/-. Packing boxes, cases, crates, etc., are charged for at cost and are returnable.

SPEED TWIN (5T)

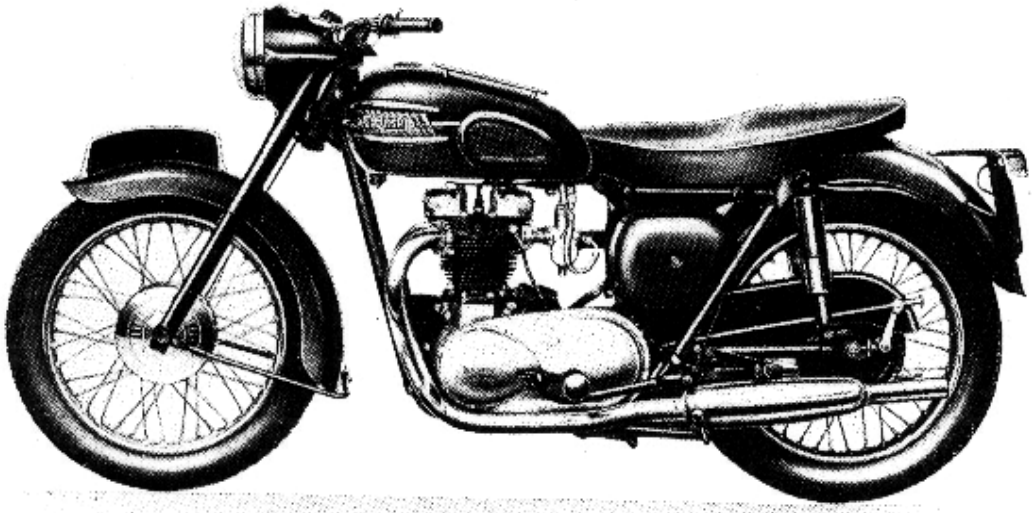

THUNDERBIRD (6T)

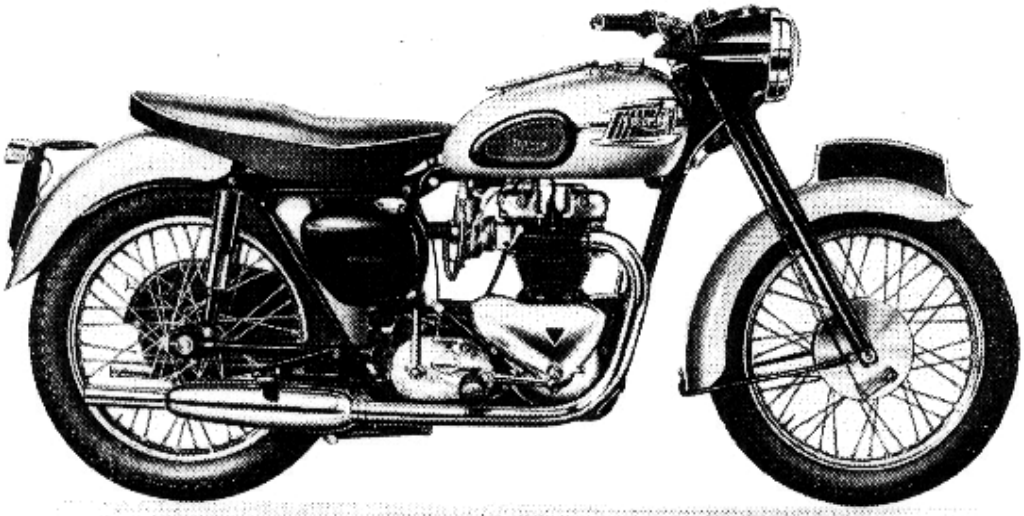

SPEED TWIN (5T)

SPECIFICATION

Bore and stroke, mm. ...	63 × 80
ins. ...	2.48 × 3.15
Cylinder capacity c/cm. (cu. ins.) ...	498 (30.5)
Compression ratio	7 : 1
Engine sprocket	22
Carburetter main jet (Amal) ...	200
Carburetter pilot jet (Amal) ...	30
Carburetter slide (Amal)	...376/3½
Carburetter needle jet (Amal) ...	.1065
Tappet clearance, cold ins. (mm.)	.010 (.26)
Ignition (fully retard) ins. (mm.) ...	1/32 (0.8) B.T.C.
Piston ring gap Compression— ins. (mm.) ...	.010-.014 (.25-.35)
Scraper— ins. (mm.) ...	.007-.011 (.18-.28)
Petrol tank, gallons (litres)	... 4 (18)
Oil tank, pints (litres) ...	... 5 (3)
Weight lbs. (dry) (kilos)...	380 (173)

THUNDERBIRD (6T)

SPECIFICATION

Bore and stroke, mm. ...	...71 × 82
ins. ...	2.79 × 3.23
Cylinder capacity c/cm. (cu. ins.) ...	649 (40)
Compression ratio ...	... 7 : 1
Engine sprocket	24
Carburetter (S.U.)	Type MC2
Jet needle	M9
Tappet clearance, cold ins. (mm.)	.010 (.26)
Ignition (fully retard) ins. (mm.) ...	1/32 (0.8) B.T.C.
Piston ring gap (Compression and Scraper) ins. (mm.)	.010-.014 (.25-.35)
Petrol tank, gallons (litres)	... 4 (18)
Oil tank, pints (litres) ...	... 5 (3)
Weight, lbs. (dry) (kilos)	385 (175)

TIGER 100 (T100)

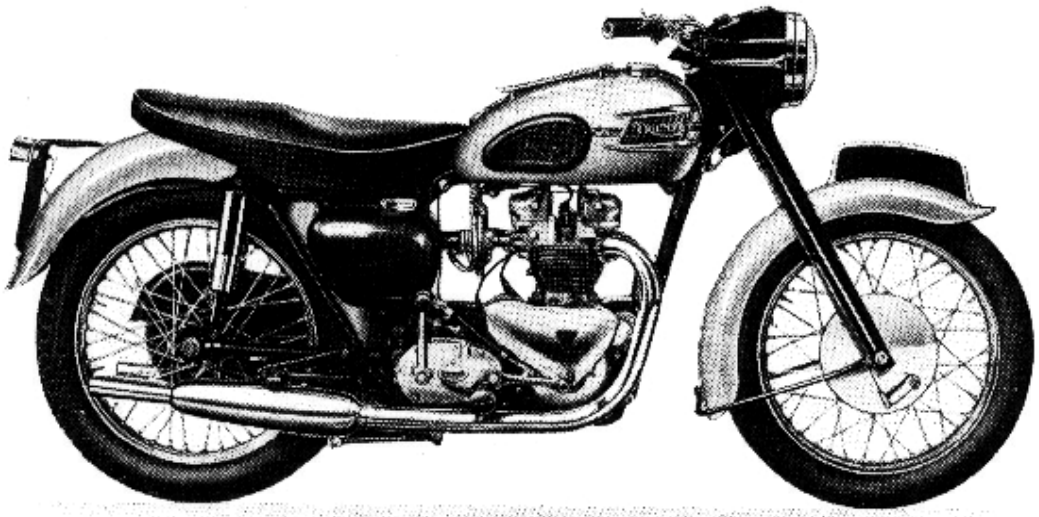

TIGER 110 (T110)

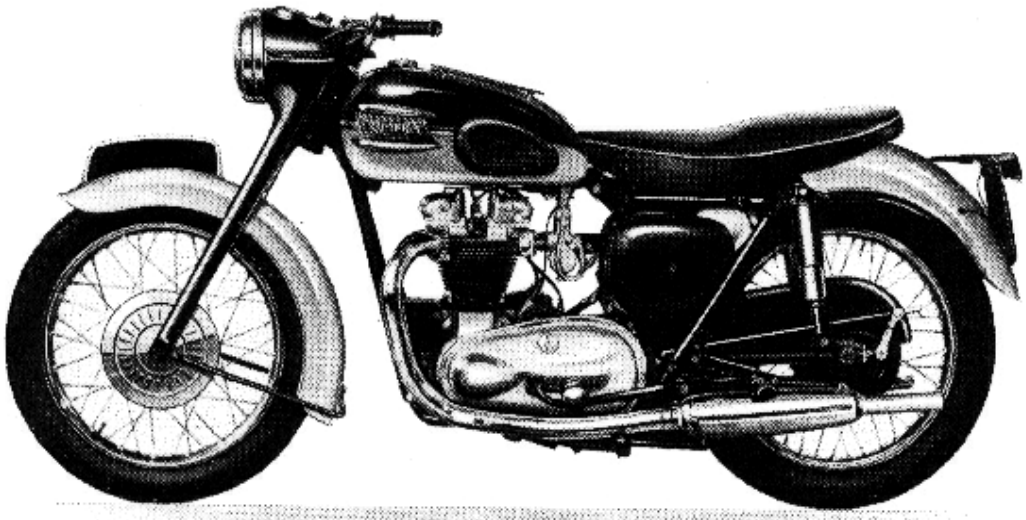

TIGER 100 (T100)

SPECIFICATION

Bore and stroke, mm. ...	...63×80
ins. ...	2.48×3.15
Cylinder capacity c/cm. (cu. ins.) ...	498 (30.5)
Compression ratio	8 : 1
Engine sprocket, solo	22
Carburetter main jet (Amal) ...	220
Carburetter pilot jet (Amal) ...	25
Carburetter slide (Amal)	...376/3½
Carburetter needle jet (Amal) ...	.1065
Tappet clearance, cold ins. (mm.)	.010 (.26)
Ignition, fully advanced ins. (mm.) ...	⅜ (9.5) B.T.D.C.
Piston ring gap	
Compression— ins. (mm.) ...	.010-.014 (.25-.35)
Scraper— ins. (mm.) ...	.007-.011 (.18-.28)
Petrol tank, gallons (litres)	... 4 (18)
Oil tank, pints (litres) ...	... 5 (3)
Weight lbs. (dry) (kilos)	375 (170)

TIGER 110 (T110)

SPECIFICATION

Bore and stroke, mm. ...	...71×82
ins. ...	2.79×3.23
Cylinder capacity c/cm. (cu. ins.) ...	649 (40)
Compression ratio	8 : 1
Engine sprocket, solo	24
Carburetter main jet (Amal) ...	*250
Carburetter pilot jet (Amal) ...	25
Carburetter slide (Amal)	...376/3½
Carburetter needle jet (Amal) ...	.1065
Tappet clearance, cold	... .004 ex (.10)
ins. (mm.) ...	... .002 in. (.05)
Ignition, fully advanced ins. (mm.) ...	23/64 (9.2) B.T.D.C.
Piston ring gap (Compression and Scraper) ins. (mm.)	.010-.014 (.25-.35)
Petrol tank, gallons (litres)	... 4 (18)
Oil tank, pints (litres) ...	... 5 (3)
Weight lbs. (dry) (kilos)	395 (179)

*270 without air filter

TROPHY (TR5)

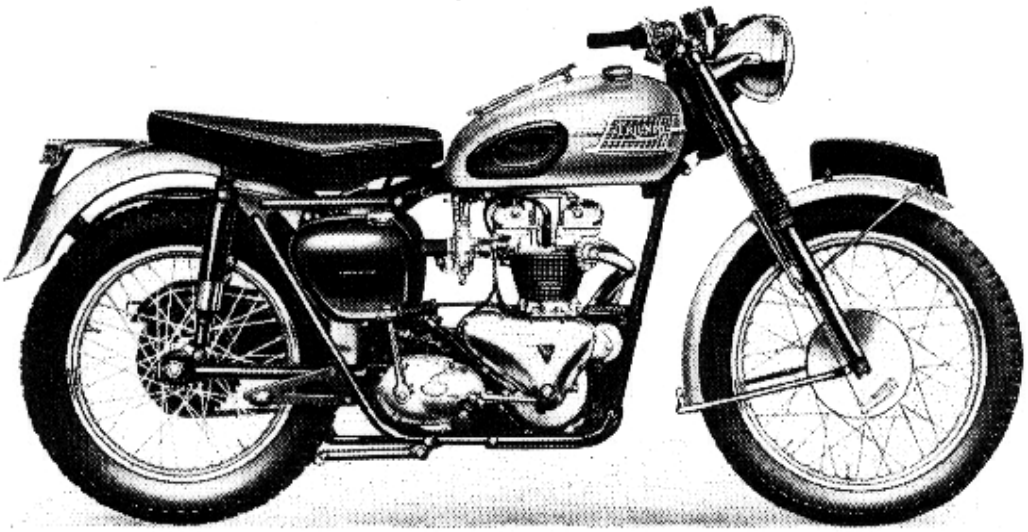

TROPHY (TR6)

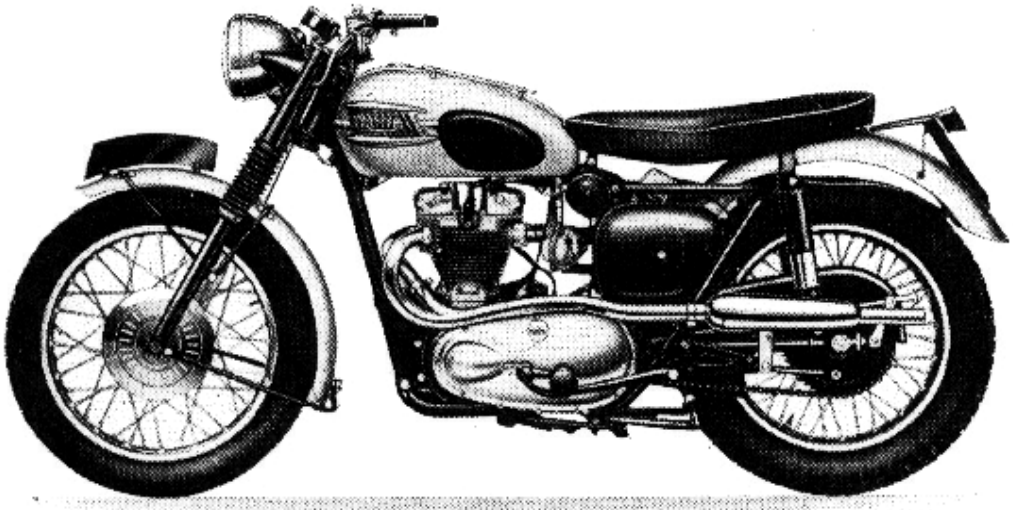

TROPHY (TR5)

SPECIFICATION

Bore and stroke, mm. ...	...63 × 80
ins. ...	2.48 × 3.15
Cylinder capacity c/cm. (cu. ins.) ...	498 (30.5)
Compression ratio ...	... 8 : 1
Engine sprocket	... 21
Carburetter main jet (Amal) ...	220
Carburetter pilot jet (Amal) ...	25
Carburetter slide (Amal)	...376/3½
Carburetter needle jet (Amal) ...	.1065
Tappet clearance, cold ins. (mm.) ...	Inlet .002 (0.10) Exhaust .004 (0.05)
Ignition, fully advanced ins. (mm.) ...	15/32 (12) B.T.D.C.
Piston ring gap Compression— ins. (mm.) ...	.010-.014 (.25-.35)
Scraper— ins. (mm.) ...	.007-.011 (.18-.28)
Petrol tank, gallons (litres)	3 (13.5)
Oil tank, pints (litres) ...	... 5 (3)
Weight lbs. (dry) (kilos)	365 (166)

TROPHY (TR6)

SPECIFICATION

Bore and stroke, mm. ...	...71 × 82
ins. ...	2.79 × 3.23
Cylinder capacity c/cm. (cu. ins.) ...	649 (40)
Compression ratio ...	... 8 : 1
Engine sprocket, solo ...	... 24
Carburetter main jet (Amal) ...	*250
Carburetter pilot jet (Amal) ...	25
Carburetter slide (Amal)	...376/3½
Carburetter needle jet (Amal) ...	.1065
Tappet clearance, cold ...	.004 ex (.10)
ins. (mm.) ...	... .002 in. (.05)
Ignition, fully advanced ins. (mm.) ...	23/64 (9.2) B.T.D.C.
Piston ring gap (Compression and Scraper) ins. (mm.)	.010-.014 (.25-.35)
Petrol tank, gallons (litres)	... 4 (18)
Oil tank, pints (litres) ...	... 5 (3)
Weight lbs. (dry) (kilos)	370 (168)

*270 without air filter

CARTON PACK COMPONENT LIST—GROUP I

The following sub-assemblies are supplied in carton packs under the C.P. part number stated. The contents of these carton packs are preserved and will not deteriorate under adverse conditions.

PART No.			DESCRIPTION AND CONTENTS
Brake Lining			
CP.38	2	NW.243	Lining, brake
	16	W.129	Rivet
CP.66	2	W.631	Lining, brake
	16	W.129	Rivet
Crankcase Bearing			
CP.144	2	E.1591	Bearing ball, d/s and t/s
Fork (Telescopic) Service Pack			
CP.50	2	H.443	Bearing, lower
	2	H.441	Bearing, upper
	2	E.1335	Washer, copper
	4	H.430	Washer, drain filler plug
	2	H.452	Restrictor, oil
	2	H.453	Cup, oil restrictor
	2	H.454	Pin, restrictor cup
	2	H.391	Washer, dust excluder felt
	2	H.420	Washer, outer cover felt
	2	H.1065	Washer, aluminium
Gears, Standard Ratio			
CP.145	1	T.1382	Gear, mainshaft high
	1	T.916	Gear, mainshaft 2nd
	1	T.1063	Gear, layshaft and high
	1	T.1065	Gear, layshaft 2nd
	1	T.934	Gear, speedometer driven
Gears, Wide Ratio			
CP.94	1	T.1384	Gear, mainshaft high
	1	T.968	Gear, mainshaft 2nd
	1	T.971	Gear, layshaft and high
	1	T.974	Gear, layshaft 2nd
	1	T.975	Gear, speedometer driven

PART No.			DESCRIPTION AND CONTENTS
Gear, Close Ratio			
CP.95	1	T.1177	Mainshaft and low gear
	1	T.1383	Gear, mainshaft high
	1	T.1179	Gear, mainshaft 3rd
	1	T.955	Gear, mainshaft 2nd
	1	T.959	Layshaft and high gear
	1	T.964	Gear, layshaft 3rd
	1	T.963	Gear, layshaft 2nd
	1	T.961	Gear, layshaft low
	1	T.983	Plug, speedometer drive sealing
	1	T.948	Washer, speedometer drive plug
Kickstarter Ratchet Gear			
CP.27	1	T.730	Pinion, kickstarter
	1	T.731	Ratchet, kickstart
	1	T.1250	Spring, ratchet
	1	T.1338	Sleeve
	1	T.732	Lockwasher
Pistons 500 c.c. Models			
CP.109	1	E.3052	Piston, CR. 5 : 1
	1	E.656	Ring, first compression
	1	E.3048	Ring, second compression (Taper)
	1	GE.29	Ring, scraper
	1	WE.203E	Pin, gudgeon
	2	WE.479	Circlip
CP.109/20	1	E.3052/20	Piston, +.020", CR. 5 : 1
	1	E.656/20	Ring, first compression
	1	E.3048/20	Ring, second compression (Taper)
	1	GE.29/20	Ring, scraper
	1	WE.203E	Pin, gudgeon
	2	WE.479	Circlip
CP.37	1	E.1969	Piston, CR. 6 : 1
	1	E.656	Ring, first compression
	1	E.3048	Ring, second compression (Taper)
	1	GE.29	Ring, scraper
	1	WE.203E	Pin, gudgeon
	2	WE.479	Circlip
CP.37/10	1	E.1969/10	Piston, +.010", CR. 6 : 1
	1	E.656/10	Ring, first compression
	1	E.3048/10	Ring, second compression (Taper)
	1	GE.29/10	Ring, scraper
	1	WE.203E	Pin, gudgeon
	2	WE.479	Circlip

GROUP 1 – CARTON PACK

PART No.			DESCRIPTION AND CONTENTS
CP.37/20	1	E.1969/20	Piston, +.020", CR. 6 : 1
	1	E.656/20	Ring, first compression
	1	E.3048/20	Ring, second compression (Taper)
	1	GE.29/20	Ring, scraper
	1	WE.203E	Pin, gudgeon
	2	WE.479	Circlip
CP.29	1	E.1563	Piston, CR. 7 : 1
	1	E.656	Ring, first compression
	1	E.3048	Ring, second compression (Taper)
	1	GE.29	Ring, scraper
	1	WE.203E	Pin, gudgeon
	2	WE.479	Circlip
CP.29/10	1	E.1563/10	Piston, +.010", CR. 7 : 1
	1	E.656/10	Ring, first compression
	1	E.3048/10	Ring, second compression (Taper)
	1	GE.29/10	Ring, scraper
	1	WE.203E	Pin, gudgeon
	2	WE.479	Circlip
CP.29/20	1	E.1563/20	Piston, +.020", CR. 7 : 1
	1	E.656/20	Ring, first compression
	1	E.3048/20	Ring, second compression (Taper)
	1	GE.29/20	Ring, scraper
	1	WE.203E	Pin, gudgeon
	2	WE.479	Circlip
CP.29/30	1	E.1563/30	Piston, +.030", CR. 7 : 1
	1	E.656/30	Ring, first compression
	1	E.3048/30	Ring, second compression (Taper)
	1	GE.29/30	Ring, scraper
	1	WE.203E	Pin, gudgeon
	2	WE.479	Circlip
CP.29/40	1	E.1563/40	Piston, +.040", CR. 7 : 1
	1	E.656/40	Ring, first compression
	1	E.3048/40	Ring, second compression (Taper)
	1	GE.29/40	Ring, scraper
	1	WE.203E	Pin, gudgeon
	2	WE.479	Circlip

CARTON PACK – GROUP I

PART No.			DESCRIPTION AND CONTENTS
CP.131	1	E.1908	Piston, CR. 7.6 : 1
	1	E.656	Ring, first compression
	1	E.3048	Ring, second compression (Taper)
	1	GE.29	Ring, scraper
	1	WE.203E	Pin, gudgeon
	2	WE.479	Circlip
CP.131/10	1	E.1908/10	Piston, +.010", CR. 7.6 : 1
	1	E.656/10	Ring, first compression
	1	E.3048/10	Ring, second compression (Taper)
	1	GE.29/10	Ring, scraper
	1	WE.203E	Pin, gudgeon
	1	WE.479	Circlip
CP.131/20	1	E.1908/20	Piston, +.020" CR. 7.6 : 1
	1	E.656/20	Ring, first compression
	1	E.3048/20	Ring, second compression (Taper)
	1	GE.29/20	Ring, scraper
	1	WE.203E	Pin, gudgeon
	1	WE.479	Circlip
CP.135	1	E.3098	Piston, CR. 8 : 1
	1	E.656	Ring, first compression
	1	E.3048	Ring, second compression (Taper)
	1	GE.29	Ring, scraper
	1	WE.203E	Pin, gudgeon
	2	WE.479	Circlip
CP.135/10	1	E.3098/10	Piston, +.010" CR. 8 : 1
	1	E.656/10	Ring, first compression
	1	E.3048/10	Ring, second compression (Taper)
	1	GE.29/10	Ring, scraper
	1	WE.203E	Pin, gudgeon
	2	WE.479	Circlip
CP.135/20	1	E.3098/20	Piston, +.020", CR. 8 : 1
	1	E.656/20	Ring, first compression
	1	E.3048/20	Ring, second compression (Taper)
	1	GE.29/20	Ring, scraper
	1	WE.203E	Pin, gudgeon
	2	WE.479	Circlip

GROUP 1 – CARTON PACK

PART No.			DESCRIPTION AND CONTENTS
CP.133	1	E.2489	Piston, CR. 8.5 : 1
	1	E.656	Ring, first compression
	1	E.3048	Ring, second compression (Taper)
	1	GE.29	Ring, scraper
	1	WE.203E	Pin, gudgeon
	2	WE.479	Circlip
CP.133/10	1	E.2489/10	Piston, +.010", CR. 8.5 : 1
	1	E.656/10	Ring, first compression
	1	E.3048/10	Ring, second compression (Taper)
	1	GE.29/10	Ring, scraper
	1	WE.203E	Pin, gudgeon
	2	WE.479	Circlip
CP.133/20	1	E.2489/20	Piston, +.020" CR. 8.5 : 1
	1	E.656/20	Ring, first compression
	1	E.3048/20	Ring, second compression (Taper)
	1	GE.29/20	Ring, scraper
	1	WE.203E	Pin, gudgeon
	2	WE.479	Circlip
CP.161	1	E.3615	Piston, CR. 9 : 1
	1	E.656	Ring, first compression
	1	E.3048	Ring, second compression (Taper)
	1	GE.29	Ring, scraper
	1	WE.203E	Pin, gudgeon
	2	WE.479	Circlip
CP.161/20	1	E.3615/20	Piston, +.020", CR.9 : 1
	1	E.656/20	Ring, first compression
	1	E.3048/20	Ring, second compression (Taper)
	1	GE.29/20	Ring, scraper
	1	WE.203E	Pin, gudgeon
	2	WE.479	Circlip
CP.134	1	E.2884	Piston, CR. 9.5 : 1
	1	E.656	Ring, first compression
	1	E.3048	Ring, second compression (Taper)
	1	GE.29	Ring, scraper
	1	WE.203E	Pin, gudgeon
	2	WE.479	Circlip
CP.132	1	E.2671	Piston CR. 12 : 1
	1	E.656	Ring, first compression
	1	E.3048	Ring, second compression (Taper)
	1	GE.29	Ring, scraper
	1	WE.203E	Pin, gudgeon
	2	WE.479	Circlip

PART No.			DESCRIPTION AND CONTENTS
Pistons, 650 c.c. Models			
CP.158	1	E.3611	Piston CR. 6.3 : 1
	1	E.2897	Ring, first compression
	1	E.3049	Ring, second compression (Taper)
	1	E.2898	Ring, scraper
	1	WE.203E	Pin, gudgeon
	2	WE.479	Circlip
CP.98 (6T only)	1	E.2891	Piston, CR. 7 : 1
	1	E.2897	Ring, first compression
	1	E.3049	Ring, second compression (Taper)
	1	E.2898	Ring, scraper
	1	WE.203E	Pin, gudgeon
	2	WE.479	Circlip
CP.98/10 (6T only)	1	E.2891/10	Piston, +.010" CR. 7 : 1
	1	E.2897/10	Ring, first compression
	1	E.3049/10	Ring, second compression (Taper)
	1	E.2898/10	Ring, scraper
	1	WE.203E	Pin, gudgeon
	2	WE.479	Circlip
CP.98/20 (6T only)	1	E.2891/20	Piston, +.020" CR. 7 : 1
	1	E.2897/20	Ring, first compression
	1	E.3049/20	Ring, second compression (Taper)
	1	E.2898/20	Ring, scraper
	1	WE.203E	Pin, gudgeon
	2	WE.479	Circlip
CP.159	1	E.3612	Piston, CR. 7.5 : 1
	1	E.2897	Ring, first compression
	1	E.3049	Ring, second compression (Taper)
	1	E.2898	Ring, scraper
	1	WE.203E	Pin, gudgeon
	2	WE.479	Circlip
CP.159/10	1	E.3612/10	Piston, +.010", CR. 7.5 : 1
	1	E.2897/10	Ring, first compression
	1	E.3049/10	Ring, second compression (Taper)
	1	E.2898/10	Ring, scraper
	1	WE.203E	Pin, gudgeon
	2	WE.479	Circlip
CP.159/20	1	E.3612/20	Piston, +.020", CR. 7.5 : 1
	1	E.2897/20	Ring, first compression
	1	E.3049/20	Ring, second compression (Taper)
	1	E.2898/20	Ring, scraper
	1	WE.203E	Pin, gudgeon
	2	WE.479	Circlip

GROUP 1 – CARTON PACK

PART No.			DESCRIPTION AND CONTENTS
CP.163	1	E.3670	Piston, CR. 8 : 1
	1	E.2897	Ring, first compression
	1	E.3049	Ring, second compression (Taper)
	1	E.2898	Ring, scraper
	1	WE.203E...	Pin, gudgeon
	2	WE.479	Circlip
CP.163/10	1	E.3670/10	Piston, +·010", CR. 8 : 1
	1	E.2897/10	Ring, first compression
	1	E.3049/10	Ring, second compression (Taper)
	1	E.2898/10	Ring, scraper
	1	WE.203E...	Pin, gudgeon
	2	WE.479	Circlip
CP.163/20	1	E.3670/20	Piston, +·020", CR. 8 : 1
	1	E.2897/20	Ring, first compression
	1	E.3049/20	Ring, second compression (Taper)
	1	E.2898/20	Ring, scraper
	1	WE.203E...	Pin, gudgeon
	2	WE.479	Circlip
CP.157	1	E.3610	Piston, CR. 8.5 : 1
	1	E.2897	Ring, first compression (Taper)
	1	E.3049	Ring, second compression
	1	E.2898	Ring, scraper
	1	WE.203E...	Pin, gudgeon
	2	WE.479	Circlip
CP.157/10	1	E.3610/10	Piston, +.010" CR. 8.5 : 1
	1	E.2897/10	Ring, first compression (Taper)
	1	E.3049/10	Ring, second compression
	1	E.2898/10	Ring, scraper
	1	WE.203E...	Pin, gudgeon
	2	WE.479	Circlip
CP.157/20	1	E.3610/20	Piston, +.020", CR. 8.5 : 1
	1	E.2897/20	Ring, first compression (Taper)
	1	E.3049/20	Ring, second compression
	1	E.2898/20	Ring, scraper
	1	WE.203E...	Pin, gudgeon
	2	WE.479	Circlip
CP.160	1	E.3613	Piston, CR. 12 : 1
	1	E.2897	Ring, first compression (Taper)
	1	E.3049	Ring, second compression
	1	E.2898	Ring, scraper
	1	WE.203E...	Pin, gudgeon
	2	WE.479	Circlip

PART No.			DESCRIPTION AND CONTENTS
Piston Rings 500 c.c. Models			
CP.40	2	E.656	Ring, first compression
	2	E.3048	Ring, second compression (Taper)
	2	GE.29	Ring, scraper
CP.40/10	2	E.656/10	Ring, first compression
	2	E.3048/10	Ring, second compression (Taper)
	2	GE.29/10	Ring, scraper
CP.40/20	2	E.656/20	Ring, first compression
	2	E.3048/20	Ring, second compression (Taper)
	2	GE.29/20	Ring, scraper
CP.40/40	2	E.656/40	Ring, first compression
	2	E.3048/40	Ring, second compression (Taper)
	2	GE.29/40	Ring, scraper
Piston Rings 650 c.c. Models			
CP.99	2	E.2897	Ring, first compression
	2	E.3049	Ring, second compression (Taper)
	2	E.2898	Ring, scraper
CP.99/10	2	E.2897/10	Ring, first compression
	2	E.3049/10	Ring, second compression (Taper)
	2	E.2898/10	Ring, scraper
CP.99/20	2	E.2897/20	Ring, first compression
	2	E.3049/20	Ring, second compression (Taper)
	2	E.2898/20	Ring, scraper
Valves			
CP.6 (5T)	2	E.1955	Valve, inlet
	2	E.1956	Valve, exhaust
CP.96 (6T)	2	E.2903	Valve, inlet
	2	E.2904	Valve, exhaust
CP.103 (T100, TR5)	2	E.2969	Valve, inlet
	2	E.1956	Valve, exhaust
CP.173 (T110, TR6)	2	E.3310	Valve, inlet
	2	E.3927	Valve, exhaust

GROUP I – CARTON PACK

PART No.			DESCRIPTION AND CONTENTS
Valve Guides			
CP.97	2	E.2899	Guide, inlet
	2	E.2900	Guide, exhaust
Valve Springs			
CP.5	4	E.1488	Spring, inner
	4	E.1487	Spring, outer
CP.102	4	E.3001	Spring, inner (racing)
	4	E.3002	Spring, outer (racing)
Steering Races			
CP.156	1	H.1018	Cone and dust cover, top
	1	H.439	Cone
	2	H.111	Cups
	40	S70-3	Balls
Sidecar Machine Jack			
CP.153	1	F.4028	Bracket
	1	F.2605	Bolt
	1	F.4029	Jack
Tachometer Drive Kit (for TR.5 and TR.6)			
CP.162	1	E.3677	Timing gear cover
	1	E.3678	Grub Screw
	1	E.3679	Bearing housing assembly, driving
	1	E.3682	Bearing housing assembly, driven
	1	E.3685	L.H. nut
	1	E.3686	Driving Gear
	1	H.1083	Mounting bracket
	1	RC.109	Tachometer head
	1	52091/5	Tachometer drive cable
	1	E.2749	Driven gear
	2	H.1086	Bolt mounting bracket

REPLACEMENT PARTS

REF. No.	PART No.	DESCRIPTION	5T	6T	TR5	T100	T110	TR6
		ENGINE—GROUP 2						
		CYLINDER BLOCK						
1	E3525	Block, cylinder	1	—	—	—	—	—
2	E3332	Block, cylinder	—	1	—	—	1	—
3	E3591	Block, cylinder	—	—	1	1	—	—
4	E3332/TR6	Block, cylinder	—	—	—	—	—	1
5	E2249	Washer, cylinder base	—	—	1	1	—	—
6	E2894	Washer, cylinder base	1	1	—	—	1	1
		CYLINDER HEAD						
7	E2928	Head, cylinder c/w guides	1	—	—	—	—	—
8	E3873	Head, cylinder c/w guides	—	1	—	—	—	—
9	*E3593	Head, cylinder c/w guides	—	—	1	1	—	—
10	*E3924	Head, cylinder c/w guides	—	—	—	—	1	1
11	E2961	Adaptor, exhaust pipe	—	—	2	2	—	—
12	E3583	Adaptor, exhaust pipe	—	—	—	—	2	2
13	E2248	Gasket, cylinder head	1	—	—	—	—	—
14	E3614	Gasket, cylinder head	—	1	—	—	1	1
15	E3003	Gasket, cylinder head	—	—	1	1	—	—
16	E327	Bolt, cylinder head, short $3\frac{3}{8}''$ U/H ...	4	4	—	—	4	4
17	E1484	Bolt, cylinder head, medium $5\frac{3}{8}''$ U/H ...	2	2	—	—	2	2
18	E1596	Bolt, cylinder head (torque) $6\frac{29}{32}''$ U/H ...	2	2	—	—	2	2
19	E1596A	Bolt, cylinder head (torque) $5\frac{7}{8}''$ U/H ...	—	—	2	2	—	—
20	E2873	Bolt, cylinder head, short $3\frac{3}{4}''$ U/H ...	—	—	4	4	—	—
21	E2874	Bolt, cylinder head, medium $5\frac{15}{16}''$ U/H ...	—	—	2	2	—	—
22	GS308	Washer, cylinder head bolt	4	4	—	—	—	—
23	F2184	Washer, cylinder head bolt	—	—	8	8	8	8
		INLET MANIFOLD						
24	E3576	Manifold, inlet	1	—	—	—	—	—
25	E3074	Manifold, inlet	—	1	—	—	—	—
26	E3307	Manifold, inlet	—	—	1	1	—	—
27	E3304	Manifold, inlet	—	—	—	—	1	1
28	E1552	Washer, inlet manifold joint	2	—	—	—	—	—
29	E1676	Washer, inlet manifold joint	—	2	—	—	—	—
30	E2967	Washer, inlet manifold joint	—	—	2	2	—	—
31	E3334	Washer, inlet manifold joint	—	—	—	—	2	2

* For splayed port models see Page 109

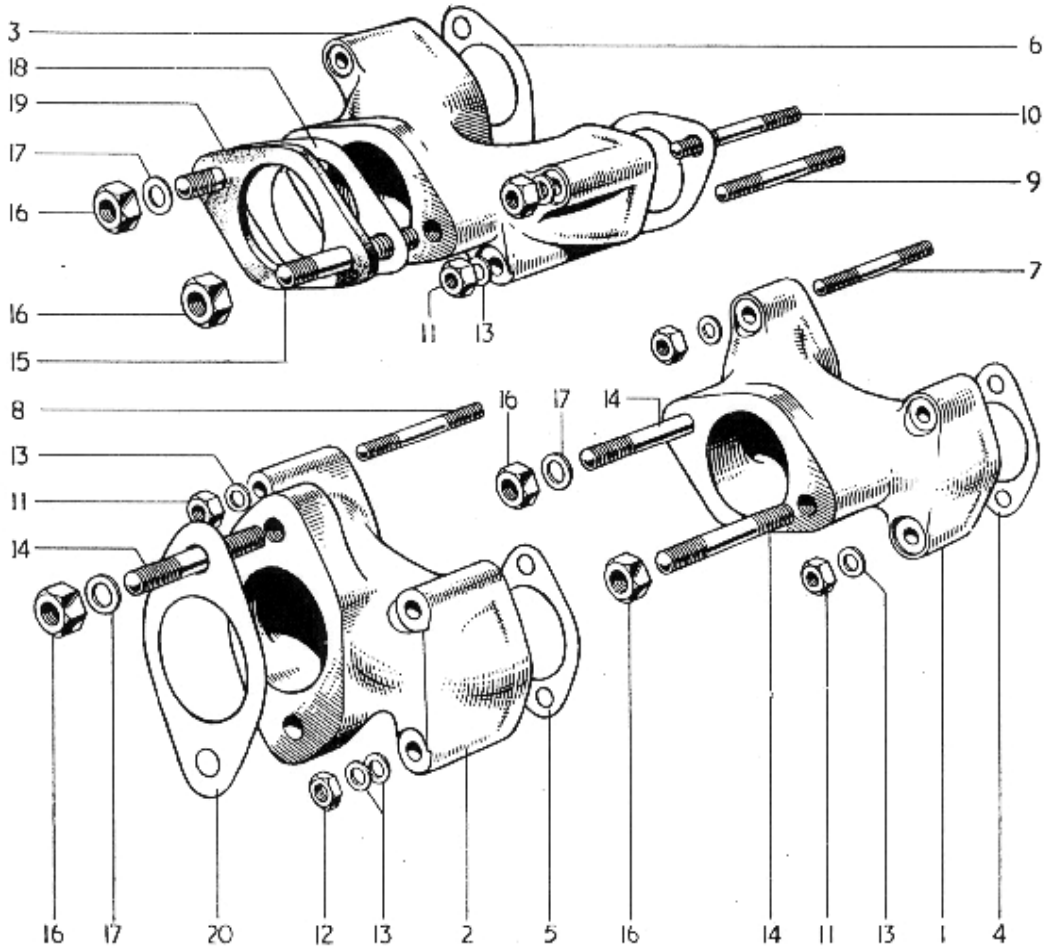

FIG. 1. INLET MANIFOLDS

INDEX

Illust. No.	*Part No.*	*Page No.*	*Ref. No.*	*Illust. No.*	*Part No.*	*Page No.*	*Ref. No.*
1	E3576	19	24	10	E2973	21	4
	E3304	19	27	11	W103	21	5
2	E3074	19	25	12	F879	21	6
3	E3307	19	26	13	S25-13	21	7
4	E1552	19	28	14	E1553	21	8
	E3334	19	31		E2962	21	9
5	E1676	19	29	15	E2962	21	9
6	E2967	19	30	16	S1-51	21	10
7	E1554	21	1	17	S25-3	21	11
	E2973	21	4	18	NA43A	93	10
8	E2920	21	2	19	E2968	93	11
9	E2972	21	3	20	E3075	94	3

REF. No.	PART No.	DESCRIPTION	5T	6T	TR5	T100	T110	TR6
1	E1554	Stud, inlet manifold to head ... $1\frac{17}{32}$" O/A	4	—	—	—	—	—
2	E2920	Stud, inlet manifold to head ... $1\frac{29}{32}$" O/A	—	4	—	—	—	—
3	E2972	Stud, inlet manifold to head, long $2\frac{3}{8}$" O/A	—	—	2	2	—	—
4	E2973	Stud, inlet manifold to head, short $1\frac{5}{16}$" O/A	—	—	2	2	4	4
5	W103	Nut, inlet manifold to head	4	3	4	4	4	4
6	F879	Nut, inlet manifold to head	—	1	—	—	—	—
7	S25-13	Washer, inlet manifold to head	4	5	4	4	4	4
8	E1553	Stud, carburetter fixing... $1\frac{3}{32}$" O/A ...	2	2	—	—	—	—
9	E2962	Stud, carburetter fixing... $1\frac{7}{32}$" O/A ...	—	—	2	2	2	2
10	SI-51	Nut, carburetter fixing	2	2	2	2	2	2
11	S25-3	Washer, carburetter fixing	1	2	1	1	1	1
12	E2415	Clip, H.T. leads to manifold	1	1	1	1	1	1
		VALVES, GUIDES AND SPRINGS						
13	E1955	Valve, inlet	2	—	—	—	—	—
14	E2903	Valve, inlet	—	2	—	—	—	—
15	E2969	Valve, inlet	—	—	2	2	—	—
16	E3310	Valve, inlet	—	—	—	—	2	2
17	E1956	Valve, exhaust	2	—	2	2	—	—
18	E2904	Valve, exhaust	—	2	—	—	—	—
19	E3927	Valve, exhaust	—	—	—	—	2	2
20	E2899	Guide, inlet valve	2	2	2	2	2	2
21	E2900	Guide, exhaust valve	2	2	2	2	2	2
22	E1488	Spring, inner valve	4	4	4	4	4	4
23	E1487	Spring, outer valve	4	4	4	4	4	4
24	E1543	Collar, valve spring top	4	4	4	4	4	4
25	E1544	Cup, valve spring bottom	4	4	4	4	4	4
26	WE259A	Cotter, valve split	8	8	8	8	8	8
		PISTONS, RINGS, ETC.						
27	CP29	Piston complete, standard CR7 : 1	2	—	—	—	—	—
28	CP29/10	Piston complete, +.010" CR7 : 1	A	—	—	—	—	—
29	CP29/20	Piston complete, +.020" CR7 : 1	A	—	—	—	—	—
30	CP29/40	Piston complete, +.040" CR7 : 1	A	—	—	—	—	—
31	CP98	Piston complete, standard CR7 : 1	—	2	—	—	—	—
32	CP98/10	Piston complete, +.010" CR7 : 1	—	A	—	—	—	—
33	CP98/20	Piston complete, +.020" CR7 : 1	—	A	—	—	—	—
34	CP135	Piston complete, standard CR8 : 1	—	—	2	2	—	—
35	CP135/10	Piston complete, +.010" CR8 : 1	—	—	A	A	—	—
36	CP135/20	Piston complete, +.020" CR8 : 1	—	—	A	A	—	—
37	CP163	Piston complete, standard CR8 : 1	—	—	—	—	2	2
38	CP163/10	Piston complete, +.010" CR8 : 1	—	—	—	—	A	A
39	CP163/20	Piston complete, +.020" CR8 : 1	—	—	—	—	A	A
40	*CP159	Piston complete, standard CR7.5 : 1	—	—	—	—	A	A
41	*CP159/10	Piston complete, +0.010" CR7.5 : 1	—	—	—	—	A	A
42	*CP159/20	Piston complete, +0.020" CR7.5 : 1	—	—	—	—	A	A
43	E656	Ring, piston compression, standard	2	—	2	2	—	—
44	E656/10	Ring, piston compression, +.010	A	—	A	A	—	—

** Supplied as standard for Australian market.*

REF. No.	PART No.	DESCRIPTION	5T	6T	TR5	T100	T110	TR6
1	E656/20	Ring, piston compression, +.020"	A	—	A	A	—	—
2	E656/40	Ring, piston compression, +.040"	A	—	—	—	—	—
3	E3048	Ring, piston compression, standard (Taper) ...	2	—	2	2	—	—
4	E3048/10	Ring, piston compression, +.010" (Taper) ...	A	—	A	A	—	—
5	E3048/20	Ring, piston compression, +.020" (Taper) ...	A	—	A	A	—	—
6	E3048/40	Ring, piston compression, +.040" (Taper) ...	A	—	—	—	—	—
7	E2897	Ring, piston compression, standard	—	2	—	—	2	2
8	E2897/10	Ring, piston compression, +.010"	—	A	—	—	A	A
9	E2897/20	Ring, piston compression, +.020"	—	A	—	—	A	A
10	E3049	Ring, piston compression, standard (Taper) ...	—	2	—	—	2	2
11	E3049/10	Ring, piston compression, +.010" (Taper) ...	—	A	—	—	A	A
12	E3049/20	Ring, piston compression, +.020" (Taper) ...	—	A	—	—	A	A
13	GE29	Ring, piston scraper, standard	2	—	2	2	—	—
14	GE29/10	Ring, piston scraper, +.010"	A	—	A	A	—	—
15	GE29/20	Ring, piston scraper, +.020"	A	—	A	A	—	—
16	GE29/40	Ring, piston scraper, +.040"	A	—	—	—	—	—
17	E2898	Ring, piston scraper, standard	—	2	—	—	2	2
18	E2898/10	Ring, piston scraper, +.010"	—	A	—	—	A	A
19	E2898/20	Ring, piston scraper, +.020"	—	A	—	—	A	A
20	WE203E	Pin, gudgeon	2	2	2	2	2	2
21	WE479	Circlip, gudgeon pin	4	4	4	4	4	4

Piston assemblies (Alternative Compression Ratios) and piston ring sets are available in carton packs, see pages 11 to 16.

CRANKSHAFT AND FLYWHEEL ASSEMBLY

22	E3451	Crankshaft and flywheel assembly	1	—	1	1	—	—
23	E3452	Crankshaft and flywheel assembly	—	1	—	—	1	1
24	E3306	Flywheel	1	1	1	1	1	1
25	E3453	Crankshaft, timing side c/w stud	1	—	1	1	—	—
26	E3454	Crankshaft, timing side c/w stud	—	1	—	—	1	1
27	E3455	Plug, T/S crankshaft	1	1	1	1	1	1
28	E3329	Crankshaft, driving side c/w stud	1	—	1	1	—	—
29	E3330	Crankshaft, driving side c/w stud	—	1	—	—	1	1
30	E3114	Stud, driving side, crankshaft $1\frac{3}{16}$" O/A ...	1	1	1	1	1	1
31	E1562	Bolt, crankshaft to flywheel $1\frac{3}{32}$" U/H ...	6	6	6	6	6	6
32	W103	Nut, crankshaft to flywheel bolt	6	6	6	6	6	6
33	E3456	Oil tube, crankshafts	1	1	1	1	1	1

CONNECTING RODS

REF. No.	PART No.	DESCRIPTION	5T	6T	TR5	T100	T110	TR6
1	E3606	Connecting rod, complete	2	2	2	2	2	2
2	E3586	Bearing, connecting rod big end	4	4	4	4	4	4
3	E1511	Bush, connecting rod small end	2	2	2	2	2	2
4	E2490A	Bolt, connecting rod to cap $2\frac{33}{64}$" U/H ...	4	4	4	4	4	4
5	E2922	Nut, connecting rod to cap bolt	4	4	4	4	4	4

Note.—Connecting rod assembly does not include E3586 big end bearings. These bearings are also available in 0.010" and 0.020" undersizes.

CRANKCASE

6	E2220A/3281	Crankcase assembly less main bearings ...	—	—	1	1	—	—
7	E2892/3314	Crankcase assembly less main bearings ...	1	1	—	—	—	—
8	E2892/3282	Crankcase assembly less main bearings ...	—	—	—	—	1	1
9	E672	Stud, crankcase cylinder base ... $1\frac{5}{8}$" O/A	6	6	6	6	6	6
10	E3523	Stud, crankcase cylinder base (Dowel) $1\frac{5}{8}$" O/A	2	2	2	2	2	2
11	W76	Nut, crankcase cylinder base stud	4	4	—	—	4	4
12	PO172A	Nut, crankcase cylinder base stud	4	4	—	—	4	4
13	E2412	Nut, crankcase cylinder base stud	—	—	8	8	—	—
14	GS308	Washer, crankcase cylinder base stud ...	—	—	8	8	—	—
15	E1534A	Dowel, crankcase cylinder base stud (E3523)	2	2	2	2	2	2
16	E1579	Dowel, crankcase halves	1	1	1	1	1	1
17	E1534A	Dowel, crankcase halves hollow	1	1	1	1	1	1
18	E2022	Stud, magneto/distributor to crankcase $1\frac{5}{16}$" O/A	3	3	3	3	3	3
19	F1008	Nut, magneto to crankcase stud	—	—	3	3	3	3
20	S25-3	Washer, magneto to crankcase stud	—	—	3	3	3	3
21	S1-51	Nut, distributor to crankcase stud	3	3	—	—	—	—
22	E1539	Stud, oil junction block $1\frac{7}{32}$" O/A	1	1	1	1	1	1
23	S1-51	Nut, oil junction block stud	1	1	1	1	1	1
24	S23-3	Washer, oil junction block stud	1	1	1	1	1	1
25	E1532	Dowel, oil junction block	1	1	1	1	1	1
26	E1535	Dowel, crankcase to timing cover	1	1	1	1	1	1

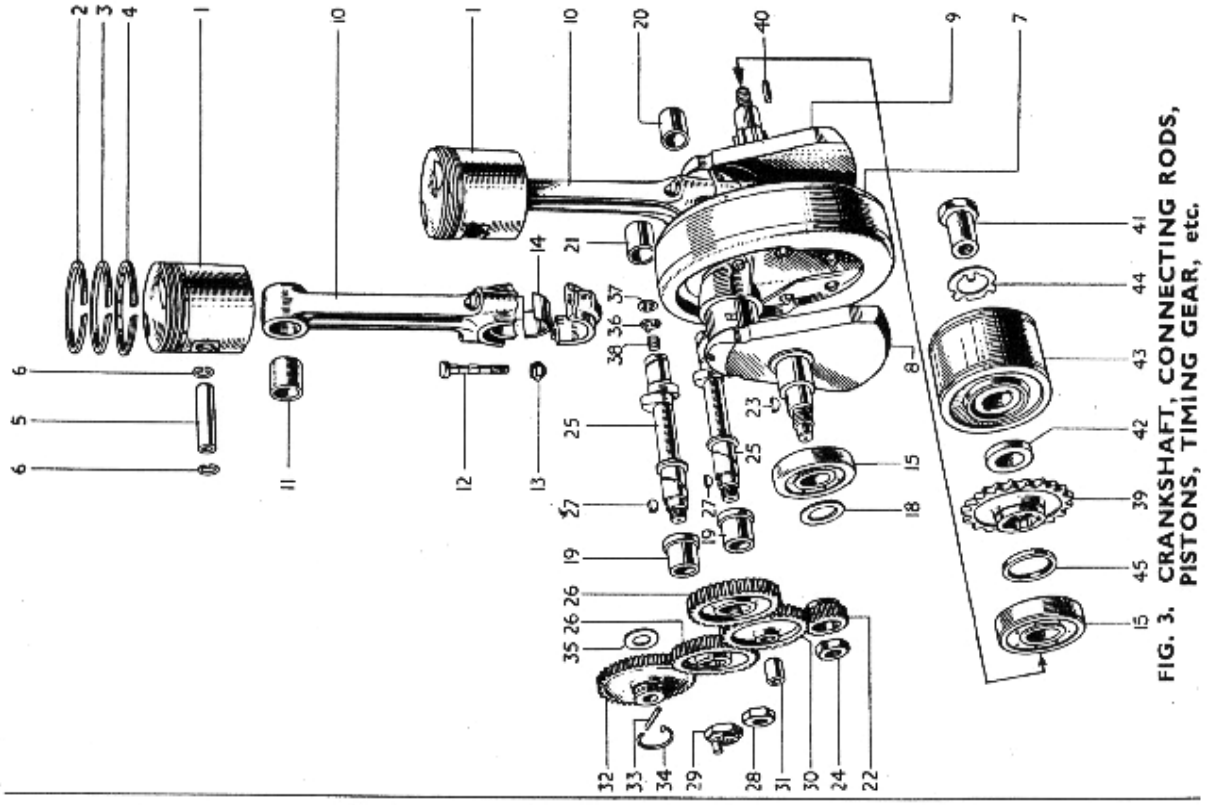

FIG. 3. CRANKSHAFT, CONNECTING RODS, PISTONS, TIMING GEAR, etc.

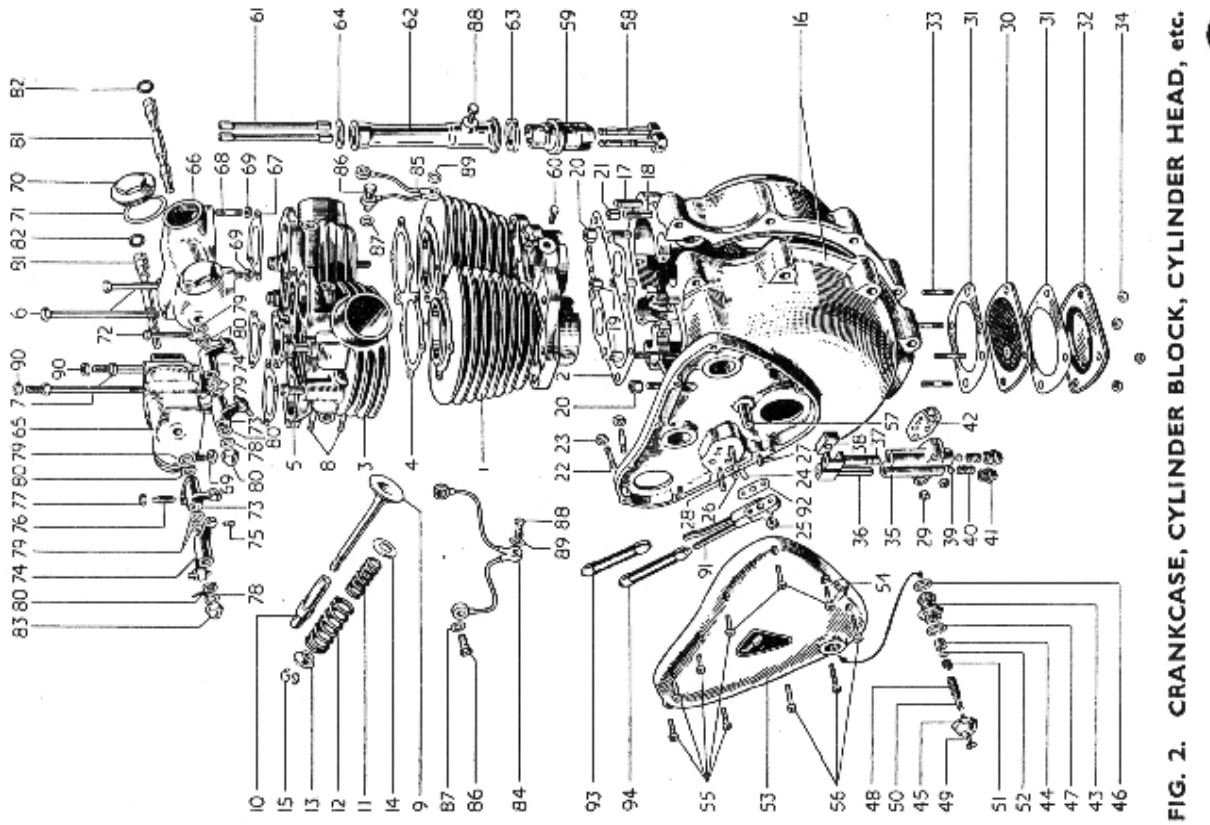

FIG. 2. CRANKCASE, CYLINDER BLOCK, CYLINDER HEAD, etc.

INDEX FIG. 2

Illust. No.	Part No.	Page No.	Ref. No.	Illust. No.	Part No.	Page No.	Ref. No.	Illust. No.	Part No.	Page No.	Ref. No.
1	E3525	19	1	31	E487	32	8	63	E1496	34	15
2	E2894	19	6	32	E486	32	9	64	E3547	34	16
3	E2928	19	7	33	E1540	32	10	65	E1461T	34	17
4	E2248	19	13	34	F879	32	12	66	E1462T	34	19
5	E327	19	16	35	GS35	32	27	67	E1650	34	21
6	E1484	19	17	36	GS153	32	28	68	E1540	34	23
7	E1596	19	18	37	E1476	32	29	69	F879	34	25
8	E1554	21	1	38	E495	32	30	70	E1564	34	27
9	E1955	21	13	39	S70-7	32	31	71	E1577	34	28
	E1956	21	17	40	E403	32	32	72	E1545	34	29
10	E2899	21	20	41	E2360	32	33	73	E1457	34	32
	E2900	21	21	42	E1537	32	34	74	E1458	34	33
11	E1488	21	22	43	E2794	33	2	75	E1483	34	34
12	E1487	21	23	44	GS251	33	3	76	E1513	34	35
13	E1543	21	24	45	E2790	33	4	77	E470	34	36
14	E1544	21	25	46	E1670	33	5	78	E1330	35	1
15	WE259A	21	26	47	GS254	33	6	79	E1575	35	2
16	E2892/3314	23	7	48	E2788	33	7	80	E1574	35	3
17	E672	23	9	49	E2791	33	8	81	E1512	35	4
18	E3523	23	10	50	E2793	33	9	82	E3253	35	5
19	W76	23	11	51	E2789	33	10	83	E1435	35	6
20	PO172A	23	12	52	E2792	33	11	84	GS272	35	10
21	E1534A	23	15	53	E3110/5T	33	12	85	GS273	35	11
22	E2022	23	18	54	E2615	33	24	86	E1601	35	12
23	S1-51	23	21	55	E3437	33	26	87	E1335	35	14
24	E1539	23	22	56	E3439	33	27	88	E984	35	15
25	S1-51	23	23	57	E375	33	39	89	E1880	35	16
26	E1532	23	25	58	E3059	34	6	90	S152	50	19
27	E1535	23	26	59	E1477	34	7	91	E3355	74	23
28	E1536	32	1	60	H200	34	9	92	E1529	74	24
29	F879	32	2	61	E1693	34	11	93	E3354	74	22
30	E529	32	7	62	E1505	34	13	94	E3353	74	21

INDEX FIG. 3

Illust. No.	Part No.	Page No.	Ref. No.	Illust. No.	Part No.	Page No.	Ref. No.	Illust. No.	Part No.	Page No.	Ref. No.
1	CP29	21	27	15	E1591	32	13	31	E400	33	38
2	E656	21	43	18	E3300	32	19	32	E3123	33	40
3	E3048	22	3	19	E1479	32	15	33	E3125	33	41
4	GE29	22	13	20	E1516	32	16	34	E3126	33	42
5	WE203E	22	20	21	E2260	32	17	35	146460	33	43
6	WE479	22	21	22	E1472	33	28	36	E2254	34	1
7	E3306	22	24	23	E1580	33	29	37	GS87	34	2
8	E3453	22	25	24	E398	33	30	38	E2256	34	3
9	E3329	22	28	25	E3275	33	31	39	E3108/22	35	18
10	E3606	23	1	26	E1486A	33	33	40	E3115	35	27
11	E1511	23	3	27	E1558	33	34	41	E3435	35	28
12	E2490A	23	4	28	E1492	33	35	42	E3116	35	31
13	E2922	23	5	29	E1463	33	36	43	465969	104	2
14	3586	23	2	30	E1471	33	37	44	465672	104	10
								45	H1168	32	14

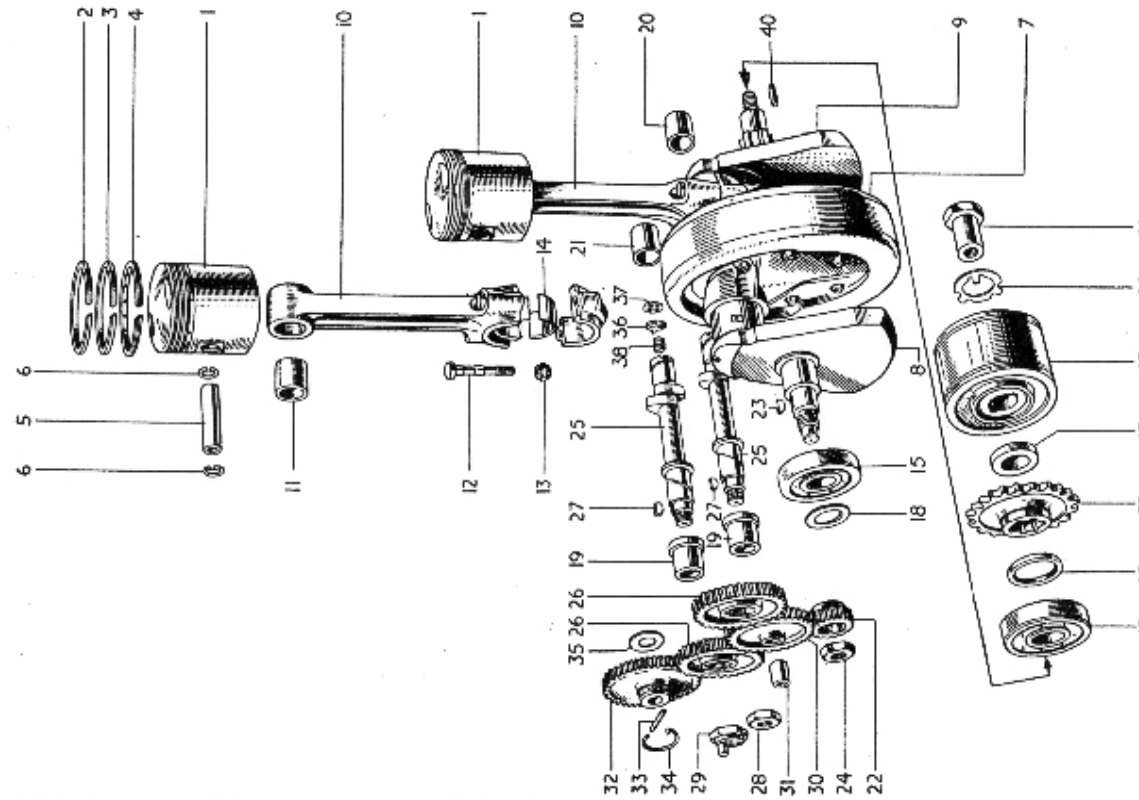

FIG. 5. CRANKSHAFT, CONNECTING RODS, PISTON TIMING GEAR, etc.

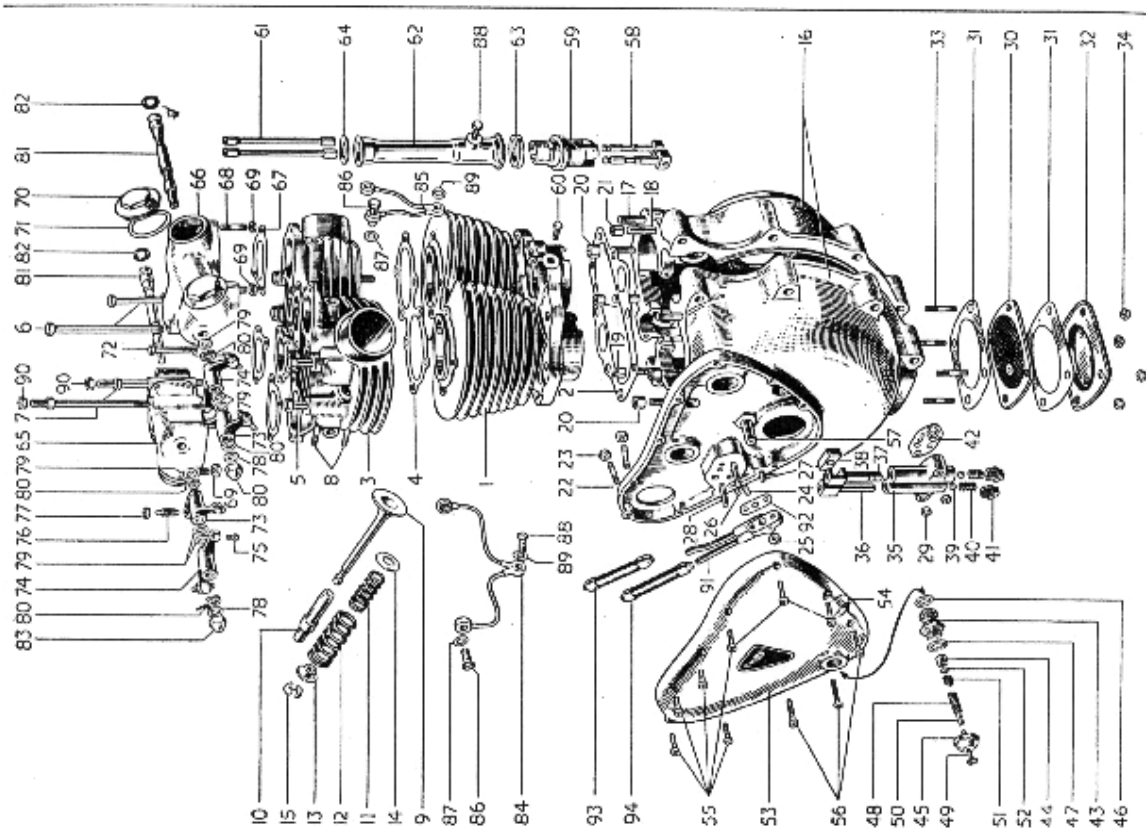

FIG. 4. CRANKCASE, CYLINDER BLOCK, CYLINDER HEAD, etc.

INDEX FIG. 4

Illust. No.	Part No.	Page No.	Ref. No.	Illust. No.	Part No.	Page No.	Ref. No.	Illust. No.	Part No.	Page No.	Ref. No.
1	E3332	19	2	31	E487	32	8	63	E1469	34	15
2	E2894	19	6	32	E486	32	9	64	E3547	34	16
3	E3873	19	8	33	E1540	32	10	65	E1461T	34	17
4	E3614	19	14	34	F879	32	12	66	E1462T	34	19
5	E327	19	16	35	GS35	32	27	67	E1650	34	21
6	E1484	19	17	36	GS153	32	28	68	E1540	34	23
7	E1596	19	18	37	E1476	32	29	69	F879	34	25
8	E2920	21	2	38	E495	32	30	70	E1564	34	27
9	E2903	21	14	39	S70-7	32	31	71	E1577	34	28
	E2904	21	18	40	E403	32	32	72	E1545	34	29
10	E2899	21	20	41	E2360	32	33	73	E1457	34	32
	E2900	21	21	42	E1537	32	34	74	E1458	34	33
11	E1488	21	22	43	E2794	33	2	75	E1483	34	34
12	E1487	21	23	44	GS251	33	3	76	E1513	34	35
13	E1543	21	24	45	E2790	33	4	77	E470	34	36
14	E1544	21	25	46	E1670	33	5	78	E1330	35	1
15	WE259A	21	26	47	GS254	33	6	79	E1575	35	2
16	E2892/3314	23	7	48	E2788	33	7	80	E1574	35	3
17	E672	23	9	49	E2791	33	8	81	E1512	35	4
18	E3523	23	10	50	E2793	33	9	82	E3253	35	5
19	W76	23	11	51	E2789	33	10	83	E1435	35	6
20	PO172A	23	12	52	E2792	33	11	84	GS272	35	10
21	E1534A	23	15	53	E3310/6T	33	13	85	GS273	35	11
22	E2022	23	18	54	E2615	33	24	86	E1601	35	12
23	S1-51	23	21	55	E3437	33	26	87	E1335	35	14
24	E1539	23	22	56	E3439	33	27	88	E984	35	15
25	S1-51	23	23	57	E375	33	39	89	F1880	35	16
26	E1532	23	25	58	E3059	34	6	90	S1-52	50	19
27	E1535	23	26	59	E1477	34	7	91	E3355	74	23
28	E1536	32	1	60	H200	34	9	92	E1529	74	24
29	F879	32	2	61	E1693	34	11	93	E3354	74	22
30	E529	32	7	62	E1505	34	13	94	E3353	74	21

INDEX FIG. 5

Illust. No.	Part No.	Page No.	Ref. No.	Illust. No.	Part No.	Page No.	Ref. No.	Illust. No.	Part No.	Page No.	Ref. No.
1	CP98	21	31	18	E3300	32	19	33	E3125	33	41
2	E2897	22	7	19	E1479	32	15	34	E3126	33	42
3	E3049	22	10	20	E1516	32	16	35	146460	33	43
4	E2898	22	17	21	E2200	32	17	36	E2254	34	1
5	WE203E	22	20	22	E1472	33	28	37	GS87	34	2
6	WE479	22	21	23	E1580	33	29	38	E2256	34	3
7	E3306	22	24	24	E398	33	30	39	E310B/24	35	20
8	E3454	22	26	25	E3275	33	31	40	E3115	35	27
9	E3330	22	29	26	E1486A	33	33	41	E3435	35	28
10	E3606	23	1	27	E1558	33	34	42	E3116	35	31
11	E1511	23	3	28	E1492	33	35	43	465969	104	2
12	E2490A	23	4	29	E1463	33	36	44	465672	104	10
13	E2922	23	5	30	E1471	33	37	45	H1168	32	14
14	E3586	23	2	31	E400	33	38				
15	E1591	32	13	32	E3123	33	40				

TROPHY (TR5) AND TIGER 100 (T100) ENGINE

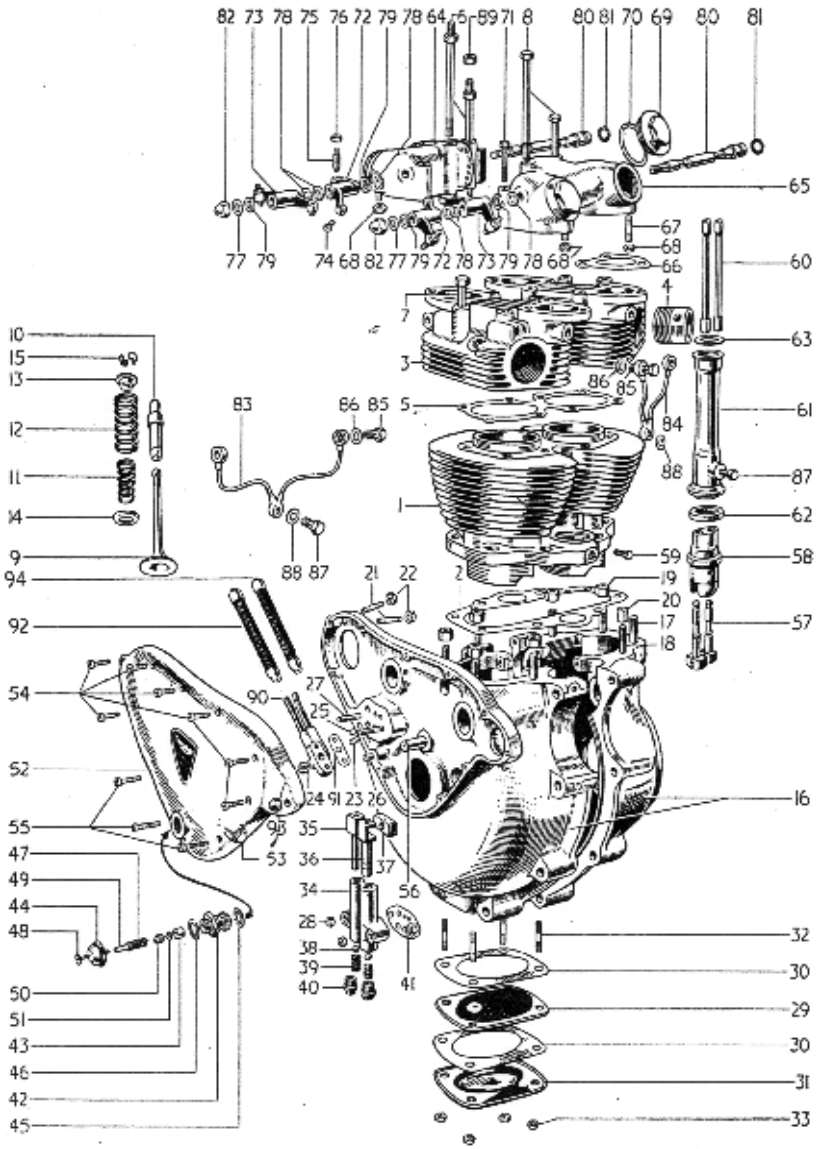

FIG. 6. CRANKCASE, CYLINDER BLOCK, CYLINDER HEAD, etc.

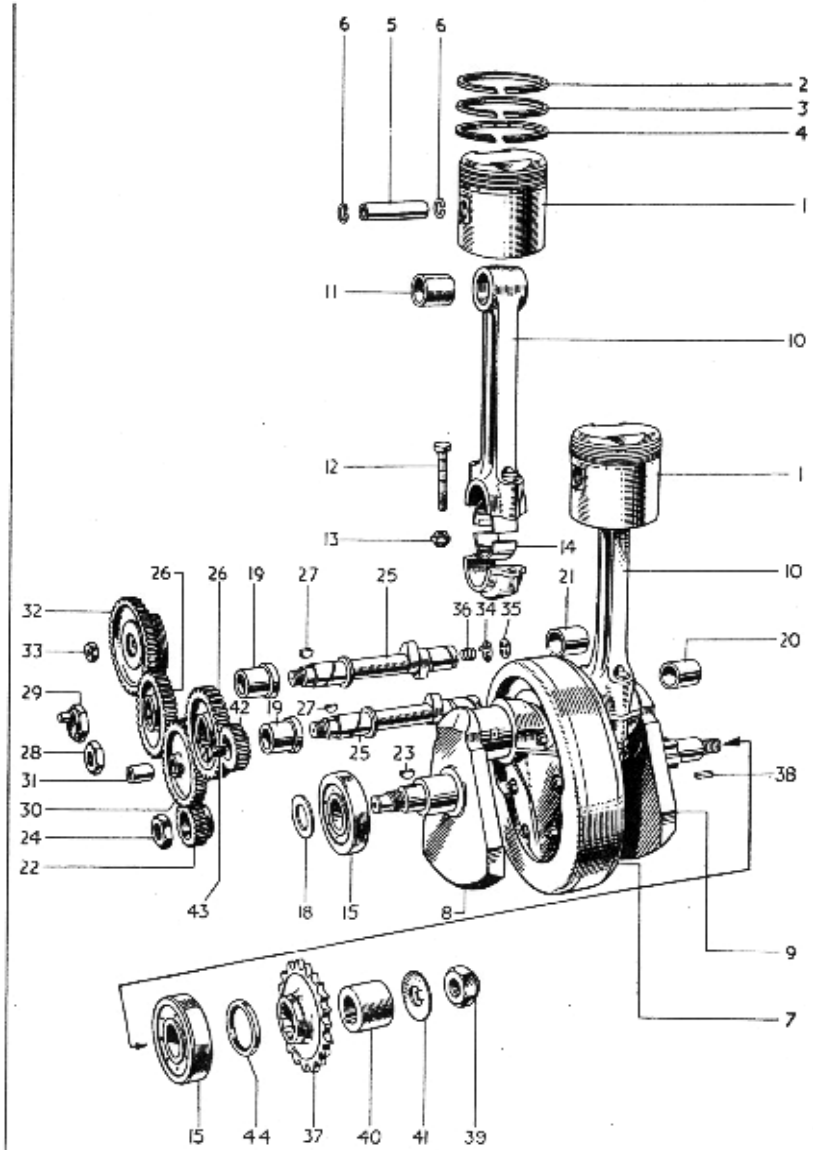

FIG. 7. CRANKSHAFT, CONNECTING RODS, PISTONS, TIMING GEARS, etc.

INDEX FIG. 6

Illust. No.	Part No.	Page No.	Ref. No.	Illust. No.	Part No.	Page No.	Ref. No.	Illust. No.	Part No.	Page No.	Ref. No.
1	E3591	19	3	32	E1540	32	10	64	E1461T	34	17
2	E2249	19	5	33	F879	32	12	65	E1462T	34	19
3	E3593	19	9	34	GS35	32	27	66	E1650	34	21
4	E2961	19	11	35	GS153	32	28	67	E2980	34	24
5	E3003	19	15	36	E1476	32	29	68	F879	34	25
6	E1596A	19	19	37	E495	32	30	69	E1564	34	27
7	E2873	19	20	38	S70-7	32	31	70	E1577	34	28
8	E2874	19	21	39	E403	32	32	71	E2982	34	30
9	E2969	21	15	40	E2360	32	33	72	E1457	34	32
	E1956	21	17	41	E1537	32	34	73	E1458	34	33
10	E2899	21	20	42	E2794	33	2	74	E1483	34	34
	E2900	21	21	43	GS251	33	3	75	E1513	34	35
11	E1488	21	22	44	E2790	33	4	76	E470	34	36
12	E1487	21	23	45	E1670	33	5	77	E1330	35	1
13	E1543	21	24	46	GS254	33	6	78	E1575	35	2
14	E1544	21	25	47	E2788	33	7	79	E1574	36	3
15	WE259A	21	26	48	E2791	33	8	80	E1512	35	4
16	E2220A/3281	23	6	49	E2793	33	9	81	E3253	35	5
17	E672	23	9	50	E2789	33	10	82	E1435	35	6
18	E3523	23	10	51	E2792	33	11	83	GS272	35	10
19	E2412	23	13	52	E2218/T100	33	15	84	GS273	35	11
20	E1534A	23	15		E2218/Trophy	33	14	85	E2767	35	13
21	E2022	23	18	53	E2615	33	24	86	E1335	35	14
22	F1008	23	19	54	E3437	33	26	87	E984	35	15
23	E1539	23	22	55	E3439	33	27	88	F1880	35	16
24	S1-51	23	23	56	E375	33	39	89	S1-52	50	19
25	E1532	23	25	57	E3059	34	6	90	E3355	74	23
26	E1535	23	26	58	GS36	34	8	91	E1529	74	24
27	E1536	32	1	59	H200	34	9	92	E3353	74	21
28	F879	32	2	60	E2620	34	12	93	E2228	98	24
29	E529	32	7	61	E1505	34	13	94	E3354	74	22
30	E487	32	8	62	E1496	34	15				
31	E486	32	9	63	E3547	34	16				

INDEX FIG. 7

Illust. No.	Part No.	Page No.	Ref. No.	Illust. No.	Part No.	Page No.	Ref. No.	Illust. No.	Part No.	Page No.	Ref. No.
1	CP135	21	34	15	E1591	32	13	30	E1471	33	37
2	E656	21	43	18	E3300	32	19	31	E400	33	38
3	E3048	22	3	19	E1479	32	15	32	E2741	33	44
4	GE29	22	13	20	E1516	32	16	33	170104	33	45
5	WE203E	22	20	21	E2260	32	17	34	E2254	34	1
6	WE479	22	21	22	E1472	32	28	35	GS87	34	2
7	E3306	22	24	23	E1580	32	29	36	E2256	34	3
8	E3453	22	25	24	E398	32	30	37	E3108/21	35	21
9	E3329	22	28	25	E3275	33	31		E3108/22	35	18
10	E3606	23	1		E3325	33	32	38	E3115	35	27
11	E1511	23	3	26	E1486A	33	33	39	E3120	35	29
12	E2490A	23	4	27	E1558	33	34	40	E3384	35	30
13	E2922	23	5	28	E1492	33	35	41	E3119	35	32
14	E3586	23	2	29	E1463	33	36	42	E2451	98	21
								43	111704	98	22
								44	H1168	32	14

TROPHY (TR6) AND TIGER 110 (T110) ENGINE

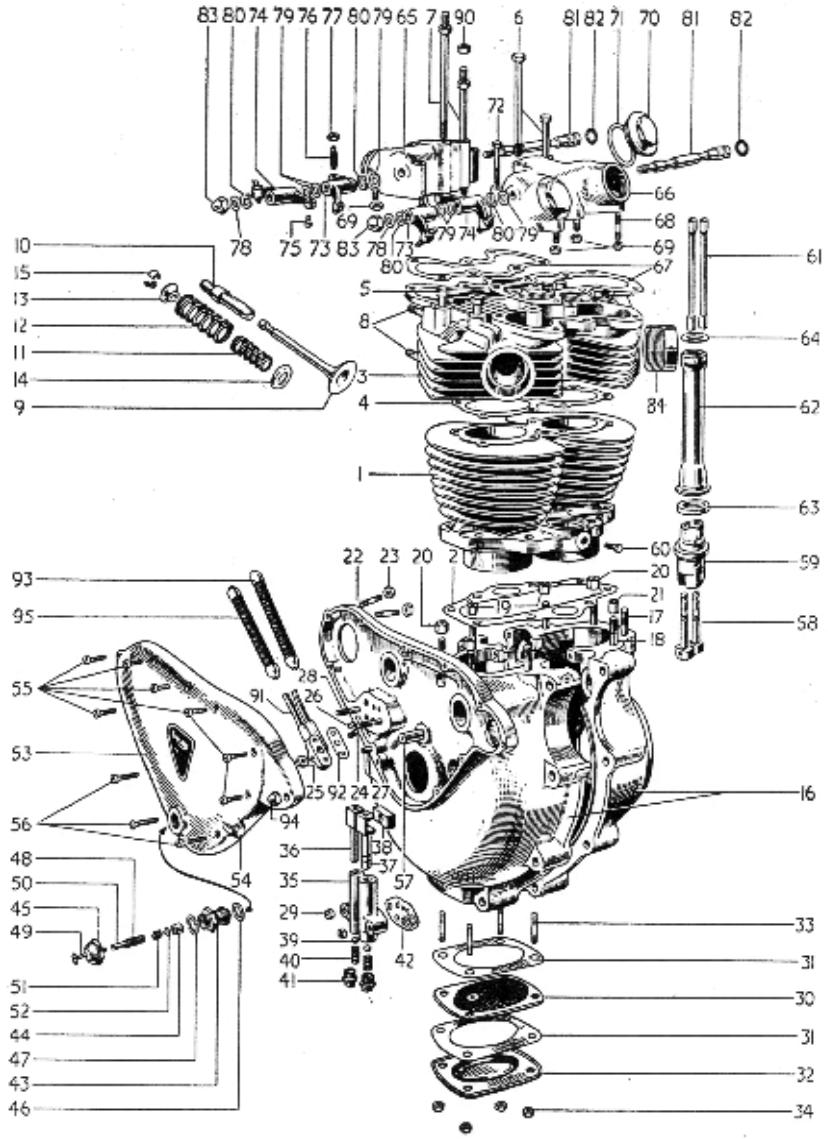

FIG. 8. CRANKCASE, CYLINDER BLOCK, CYLINDER HEAD, etc.

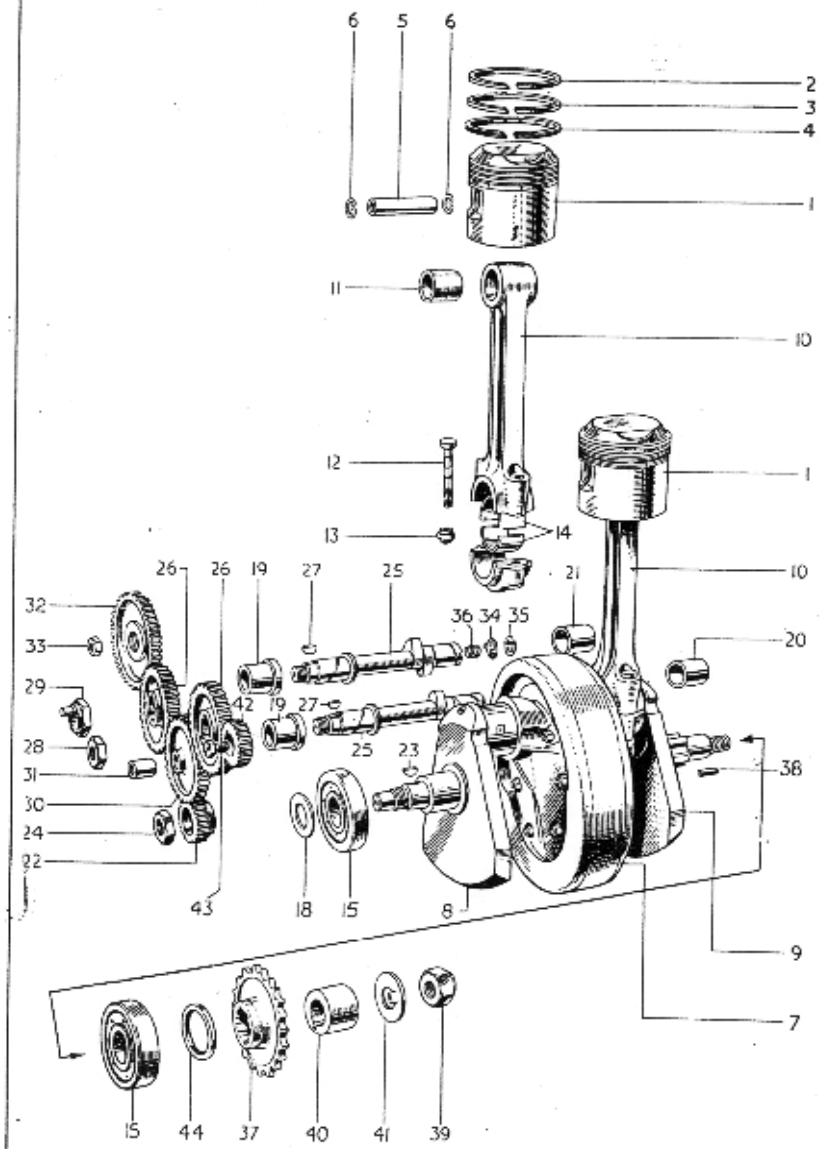

FIG. 9. CRANKSHAFT, CONNECTING RODS, PISTONS, TIMING GEARS, etc.

INDEX FIG. 8

Illust. No.	Part No.	Page No.	Ref. No.
1	E3332	19	2
	E3332/TR6	19	4
2	E2894	19	6
3	E3924	19	10
4	E3614	19	14
5	E327	19	16
6	E1484	19	17
7	E1596	19	18
8	E2973	21	4
9	E3310	21	16
	E3927	21	19
10	E2899	21	20
	E2900	21	21
11	E1488	21	22
12	E1487	21	23
13	E1543	21	24
14	E1544	21	25
15	WE259A	21	26
16	E2892/3282	23	8
17	E672	23	9
18	E3253	23	10
19	W76	23	11
20	PO172A	23	12
21	E1534A	23	15
22	E2022	23	18
23	F1008	23	19
24	E1539	23	22
25	S1-51	23	23
26	E1532	23	25
27	E1535	23	26
28	E1536	32	1
29	F879	32	2
30	E529	32	7
31	E487	32	8
32	E486	32	9
33	E1540	32	10
34	F879	32	12
35	GS35	32	27
36	GS153	32	28
37	E1476	32	29
38	E495	32	30
39	S70-7	32	31
40	E403	32	32
41	E2360	32	33
42	E1537	32	34
43	E2794	33	2
44	GS251	33	3
45	E2790	33	4
46	E1670	33	5
47	GS254	33	6
48	E2788	33	7
49	E2791	33	8
50	E2793	33	9
51	E2789	33	10
52	E2792	33	11
53	E2218/T110	33	16
	E2218/Trophy	33	14
54	E2615	33	24
55	E3437	33	26
56	E3439	33	27
57	E375	33	39
58	E3059	34	6
59	E1477	34	7
60	H200	34	9
61	E2620	34	12
62	E3646	34	14
63	E1496	34	15
64	E3547	34	16
65	E3550	34	18
66	E3551	34	20
67	E3552	34	22
68	E2980	34	24
69	F879	34	25
70	E1564	34	27
71	E1577	34	28
72	E1545	34	29
73	E1457	34	32
74	E1458	34	33
75	E1483	34	34
76	E1513	34	35
77	E470	34	36
78	E1330	35	1
79	E1575	35	2
80	E1574	35	3
81	E1512	35	4
82	E3253	35	5
83	E1435	35	6
84	E3583	19	12
90	S1-52	50	19
91	E3335	74	23
92	E1529	74	24
93	E3353	74	21
94	E2228	98	24
95	E3354	74	22

INDEX FIG. 9

Illust. No.	Part No.	Page No.	Ref. No.
1	CP163	21	37
2	E2897	22	7
3	E3049	22	10
4	E2898	22	17
5	WE203E	22	20
6	WE479	22	21
7	E3306	22	24
8	E3454	22	26
9	E3330	22	29
10	E3606	23	1
11	E1511	23	3
12	E2490A	23	4
13	E2922	23	5
14	E3586	23	2
15	E1591	32	13
18	E3300	32	19
19	E1479	32	15
20	E1516	32	16
21	E2260	32	17
22	E1472	33	28
23	E1580	33	29
24	E398	33	30
25	E3325	33	32
26	E1486A	33	33
27	E1558	33	34
28	E1492	33	35
29	E1463	33	36
30	E1471	33	37
31	E400	33	38
32	E2741	33	44
33	170104	33	45
34	E2254	34	1
35	GS87	34	2
36	E2256	34	3
37	E3108/24	35	20
38	E3115	35	27
39	E3120	35	29
40	E3384	35	30
41	E3119	35	32
42	E2451	98	21
43	111704	98	22
44	H1168	32	14

REF. No.	PART No.	DESCRIPTION	5T	6T	TR5	T100	T110	TR6
1	E1536	Stud, oil pump fixing 1 7/16" O/A	2	2	2	2	2	2
2	F879	Nut, oil pump fixing stud	2	2	2	2	2	2
3	E2312	Washer, oil pump fixing stud	2	2	2	2	2	2
4	E1508	Pipe, crankcase oil return	1	1	1	1	1	1
5	E1509	Clip, crankcase oil return pipe	1	1	1	1	1	1
6	E1645	Screw, crankcase oil return pipe 13/64" U/H ...	1	1	1	1	1	1
		CRANKCASE OIL FILTER						
7	E529	Filter, crankcase oil	1	1	1	1	1	1
8	E487	Washer, crankcase oil filter joint	2	2	2	2	2	2
9	E486	Cover, crankcase oil filter joint	1	1	1	1	1	1
10	E1540	Stud, crankcase oil filter joint 25/32" O/A ...	4	4	4	4	4	4
11	E1612	Washer, crankcase oil filter stud locking ...	4	4	4	4	4	4
12	F879	Nut, crankcase oil filter	4	4	4	4	4	4
		CRANKCASE BEARINGS						
13	E1591	Bearing, crankshaft (ball journal)	2	2	2	2	2	2
14	H1168	Oil Seal, L.H. Bearing	1	1	1	1	1	1
15	E1479	Bush, timing side camshaft	2	2	2	2	2	2
16	E1516	Bush, driving side camshaft (exhaust)... ...	1	1	1	1	1	1
17	E2260	Bush, driving side camshaft (breather) ...	1	1	1	1	1	1
18	E2311	Pin, timing side camshaft (breather)	1	1	1	1	1	1
19	E3300	Clamping Washer, T/S bearing	1	1	1	1	1	1
		STUDS AND BOLTS FOR CRANKCASE HALVES						
20	E1555	Bolt, crankcase top rear	1	1	1	1	1	1
21	S25-3	Washer, crankcase top rear bolt	1	1	1	1	1	1
22	T456	Stud, crankcase bottom front 3 3/4" O/A ...	1	1	1	1	1	1
23	SI-51	Nut, crankcase bottom front stud	2	2	2	2	2	2
24	S25-3	Washer, crankcase bottom front stud ...	2	2	2	2	2	2
25	E1647	Screw, crankcase inside boss 3/4" U/H ...	2	2	2	2	2	2

FOR ENGINE PLATE STUDS SEE PAGE 52.

		OIL PUMP						
26	E3072	Pump, assembly, oil	1	1	1	1	1	1
27	GS35	Body, oil pump	1	1	1	1	1	1
28	GS153	Plunger, oil pump feed	1	1	1	1	1	1
29	E1476	Plunger, oil pump scavenge	1	1	1	1	1	1
30	E495	Block, oil pump slider	1	1	1	1	1	1
31	S70-7	Ball, oil pump valve	2	2	2	2	2	2
32	E403	Spring, oil pump valve	2	2	2	2	2	2
33	E2360	Plug, oil pump body	2	2	2	2	2	2
34	E1537	Washer, oil pump joint	1	1	1	1	1	1

REF. No.	PART No.	DESCRIPTION	5T	6T	TR5	T100	T110	TR6
		OIL RELEASE VALVE						
1	E2795	Valve, release and oil indicator	1	1	1	1	1	1
2	E2794	Body, release valve	1	1	1	1	1	1
3	GS251	Piston, release valve	1	1	1	1	1	1
4	E2790	Cap, release valve	1	1	1	1	1	1
5	E1670	Washer, release valve body	1	1	1	1	1	1
6	GS254	Washer, release valve cap	1	1	1	1	1	1
7	E2788	Spring, release valve main	1	1	1	1	1	1
8	E2791	Shaft, indicator button	1	1	1	1	1	1
9	E2793	Tube, indicator rubber	1	1	1	1	1	1
10	E2789	Spring, indicator auxiliary	1	1	1	1	1	1
11	E2792	Nut, indicator shaft	1	1	1	1	1	1
		TIMING COVER						
12	E3110/5T	Cover, timing gear	1	—	—	—	—	—
13	E3110/6T	Cover, timing gear	—	1	—	—	—	—
14	E2218/TROPHY	Cover, timing gear	—	—	1	—	—	1
15	E2218/T100	Cover, timing gear	—	—	—	1	—	—
16	E2218/T110	Cover, timing gear	—	—	—	—	1	—
17	E1595	Patent plate	1	—	—	—	—	—
18	E2909	Patent plate	—	1	—	—	—	—
19	E2876	Patent plate	—	—	1	—	—	1
20	E1678	Patent plate	—	—	—	1	—	—
21	E2910	Patent plate	—	—	—	—	1	—
22	D208-5	Rivet, patent plate	3	3	3	3	3	3
23	E378	Bush, timing gear cover	1	1	1	1	1	1
24	E2615	Plug, timing gear cover	1	1	1	1	1	1
25	E1335	Washer, timing gear cover plug	1	1	1	1	1	1
26	E3437	Screw, timing gear cover (short) $\frac{19}{16}$" U/H	7	7	7	7	7	7
27	E3439	Screw, timing gear cover (long) $1\frac{3}{16}$" U/H	3	3	3	3	3	3
		TIMING GEARS AND CAMSHAFTS						
28	E1472	Pinion, timing	1	1	1	1	1	1
29	E1580	Key, timing pinion	1	1	1	1	1	1
30	E398	Nut, timing pinion	1	1	1	1	1	1
31	E3275	Camshaft, inlet and exhaust	2	2	—	2	—	—
32	E3325	Camshaft, inlet and exhaust	—	—	2	—	2	2
33	E1486A	Wheel, inlet and exhaust camshaft	2	2	2	2	2	2
34	E1558	Key, camshaft wheel	2	2	2	2	2	2
35	E1492	Nut, camshaft wheel exhaust	1	1	1	1	1	1
36	E1463	Nut, camshaft wheel inlet (pump drive) ...	1	1	1	1	1	1
37	E1471	Wheel, intermediate gear	1	1	1	1	1	1
38	E400	Bush, intermediate gear wheel	1	1	1	1	1	1
39	E375	Spindle, intermediate gear wheel	1	1	1	1	1	1
40	E3123	Pinion, distributor	1	1	—	—	—	—
41	E3125	Pin, distributor pinion	1	1	—	—	—	—
42	E3126	Circlip, distributor pinion	1	1	—	—	—	—
43	146460	Washer, distributor pinion (brass)	1	1	—	—	—	—
44	E2741	Gear, Magneto (fixed)	—	—	1	1	1	1
45	170104	Nut, Magneto gear $\frac{3}{8}$" std.	—	—	1	1	1	1
46	E1330	Washer, Magneto gear $\frac{3}{8}$" std.	—	—	1	1	1	1

REF. No.	PART No.	DESCRIPTION	5T	6T	TR5	T100	T110	TR6
		CRANKCASE BREATHER						
1	E2254	Valve, crankcase rotary	1	1	1	1	1	1
2	GS87	Disc, crankcase rotary valve	1	1	1	1	1	1
3	E2256	Spring, crankcase rotary valve	1	1	1	1	1	1
4	E2724	Pipe, crankcase breather	1	1	1	1	1	1
5	E3078	Extension, crankcase breather pipe (rubber)	1	1	1	1	1	1
		TAPPETS AND TAPPET BLOCKS						
6	E3059	Tappet	4	4	4	4	4	4
7	E1477	Block, tappet guide	2	2	—	—	2	2
8	GS36	Block, tappet guide	—	—	2	2	—	—
9	H200	Screw, tappet guide block lock $\frac{7}{16}$" U/H ...	2	2	2	2	2	2
10	E2312	Washer, tappet guide block lock	2	2	2	2	2	2
		PUSH RODS						
11	E1693	Rod, push	4	4	—	—	—	—
12	E2620	Rod, push	—	—	4	4	4	4
		PUSH ROD COVER TUBE						
13	E1505	Tube, push rod cover	2	2	2	2	—	—
14	E3646	Tube, push rod cover	—	—	—	—	2	2
15	E1496	Washer, push rod cover lower seal	2	2	2	2	2	2
16	E3547	Washer, push rod cover upper seal	2	2	2	2	2	2
		OVERHEAD ROCKER GEAR						
17	E1461T	Box, inlet rocker	1	1	1	1	—	—
18	E3550	Box, inlet rocker	—	—	—	—	1	1
19	E1462T	Box, exhaust rocker	1	1	1	1	—	—
20	E3551	Box, exhaust rocker	—	—	—	—	1	1
21	E1650	Gasket, rocker box joint	4	4	4	4	—	—
22	E3552	Gasket, rocker box joint	—	—	—	—	2	2
23	E1540	Stud, rocker box to cylinder head $\frac{25}{32}$" O/A	4	4	—	—	—	—
24	E2980	Stud, rocker box to cylinder head $\frac{16}{16}$" O/A	—	—	4	4	6	6
25	F879	Nut, rocker box to cylinder head	4	4	4	4	6	6
26	E3302	Washer, rocker box to cylinder head nut ...	—	—	4	4	6	6
27	E1564	Cap, rocker box inspection	4	4	4	4	4	4
28	E1577	Washer, rocker box inspection cap	4	4	4	4	4	4
29	E1545	Bolt, rocker box to cylinder head 2" U/H	4	4	—	—	4	4
30	E2982	Bolt, rocker box to cylinder head 2 $\frac{5}{32}$" U/H	—	—	4	4	—	—
31	S25-13	Washer, rocker box to cylinder head ...	4	4	4	4	4	4
32	E1457	Rocker, valve R.H.	2	2	2	2	2	2
33	E1458	Rocker, valve L.H.	2	2	2	2	2	2
34	E1483	Ball pin, valve rocker	4	4	4	4	4	4
35	E1513	Adjusting pin, valve rocker	4	4	4	4	4	4
36	E470	Locknut, adjusting pin	4	4	4	4	4	4

ENGINE — GROUP 2
GASKET SET — GROUP 3

REF. No.	PART No.	DESCRIPTION	5T	6T	TR5	T100	T110	TR6
1	E1300	Washer, valve rocker thrust ⅜"	2	2	2	2	2	2
2	E1575	Washer, valve rocker thrust ½"	6	6	6	6	6	6
3	E1574	Washer, valve rocker spring	4	4	4	4	4	4
4	E1512	Spindle, valve rocker	2	2	2	2	2	2
5	E3253	Sealing ring, rocker spindle (rubber) ...	2	2	2	2	2	2
6	E1435	Nut, valve rocker spindle (dome)	2	2	2	2	2	2
7	E1335	Washer, valve rocker spindle (copper) ...	4	4	4	4	4	4
		ROCKER OIL FEED AND DRAIN PIPES						
8	E3082	Pipe, rocker oil feed	1	1	1	1	1	1
9	E3383	Connection feed pipe (rubber)	1	1	1	1	1	1
10	GS272	Pipe, rocker oil drain inlet	1	1	1	1	—	—
11	GS273	Pipe, rocker oil drain exhaust	1	1	1	1	—	—
12	E1601	Adaptor, drain pipe to cylinder head ...	4	4	—	—	—	—
13	E2767	Adaptor, drain pipe to cylinder head ...	—	—	4	4	—	—
14	E1335	Washer, drain pipe to cylinder head ...	8	8	8	8	—	—
15	E984	Adaptor, drain pipe to cover tube	2	2	2	2	—	—
16	F1880	Washer, drain pipe to cover tube	4	4	4	4	—	—
		ENGINE SPROCKET						
17	E3108/19	Sprocket, engine 19T sidecar	1	—	—	1	—	—
18	E3108/22	Sprocket, engine 22T solo	1	—	—	1	—	—
19	E3108/21	Sprocket, engine 21T sidecar	—	1	—	—	1	1
20	E3108/24	Sprocket, engine 24T solo	—	1	—	—	1	1
21	E3108/21	Sprocket, engine 21T solo	—	—	1	—	—	—
22	E3108/17	Sprocket, engine 17T	As required					
23	E3108/18	Sprocket, engine 18T						
24	E3108/20	Sprocket, engine 20T						
25	E3108/23	Sprocket, engine 23T						
26	E3108/25	Sprocket, engine 25T						
27	E3115	Key, Rotor	1	1	1	1	1	1
28	E3435	Nut, sprocket and rotor	1	1	—	—	—	—
29	E3120	Nut, engine sprocket	—	—	1	1	1	1
30	E3384	Distance Piece, D/S crankshaft...	—	—	1	1	1	1
31	E3116	Clamping washer, sprocket and rotor ...	1	1	—	—	—	—
32	E3119	Tab washer, engine sprocket nut	—	—	1	1	1	1

For 5T and 6T Alternator and locking washer see Page 104.

GASKET SET—GROUP 3

33	GS/5T/56	Gasket set	1	—	—	—	—	—
34	GS/6T/56	Gasket set	—	1	—	—	—	—
35	GS/T100/56	Gasket set	—	—	1	1	—	—
36	GS/T110/56	Gasket set	—	—	—	—	1	1

REF. No.	PART No.	DESCRIPTION	5T	6T	TR5	T100	T110	TR6

GEARBOX—GROUP 4

1	T1525	Gearbox complete less clutch—standard ratio	1	1	—	1	1	—
2	T1528	Gearbox complete less clutch—standard ratio	—	—	1	—	—	1
3	T1526	Gearbox complete less clutch—close ratio ...	A	A	—	A	A	—
4	T1529	Gearbox complete less clutch—close ratio ...	—	—	A	—	—	A
5	T1527	Gearbox complete less clutch—wide ratio ...	A	A	—	A	A	—
6	T1530	Gearbox complete less clutch—wide ratio ...	—	—	A	—	—	A

GEARBOX CASING

7	T1201	Casing, with bushes, gearbox	1	1	1	1	1	1
8	T989	Dowel, casing to inner cover	2	2	2	2	2	2
9	E698	Stud, casing to outer cover 2⅞" O/A ...	2	2	2	2	2	2
10	S1-51	Nut, casing stud	2	2	2	2	2	2
11	S25-3	Washer, casing stud	2	2	2	2	2	2
12	T1531	Cover with bushes, gearbox inner	1	1	1	1	1	1
13	T323A	Stud, inner cover to outer cover ... 1 13/16" O/A	1	1	1	1	1	1
14	S1-51	Nut, inner cover to outer cover stud ...	1	1	1	1	1	1
15	S25-3	Washer, inner cover to outer cover stud ...	1	1	1	1	1	1
16	E3436	Screw, inner cover to casing (long) ... 1½" U/H	1	1	1	1	1	1
17	E3437	Screw, inner cover to casing ... ... 15/16" U/H	3	3	3	3	3	3
18	T45	Stop, kickstarter quadrant	1	1	1	1	1	1
19	E732	Plug, filler	1	1	1	1	1	1
20	NE507	Washer, filler plug	1	1	1	1	1	1
21	T1534	Cover, with bushes, gearbox outer	1	1	1	1	1	1
22	E3442	Screw, outer cover to casing (long) ... 3" U/H	1	1	1	1	1	1
23	E3438	Screw, outer cover to casing ... ... 2 3/16" U/H	1	1	1	1	1	1
24	E3437	Screw, outer cover to inner cover ... 15/16" U/H	2	2	2	2	2	2
25	E3439	Screw, outer cover to inner cover (long) 1 3/16" U/H	1	1	1	1	1	1
26	T1542	Cover plate, outer cover	1	1	1	1	1	1
27	T1541	Joint, washer cover plate	1	1	1	1	1	1
28	E2312	Washer, cover screw	2	2	2	2	2	2
29	T1553	Screw, cover plate ⅜" U/H	2	2	2	2	2	2
30	S46-15	Plug, gearbox drain and cover level	2	2	2	2	2	2
31	PT104B	Washer, gearbox drain and cover level ...	2	2	2	2	2	2

GEARBOX FITTINGS

32	F3769	Stud, gearbox clamp 4 13/16" O/A	1	1	1	1	1	1
33	F3770	Washer, R.H. gearbox clamp stud	1	1	1	1	1	1
34	F3771	Nut, L.H. gearbox clamp stud	1	1	1	1	1	1
35	F3772	Nut, R.H. gearbox clamp stud	1	1	1	1	1	1

REF. No.	PART No.	DESCRIPTION	5T	6T	TR5	T100	T110	TR6
		GEARBOX FITTINGS—*continued*						
1	F3575	Bolt, gearbox pivot 7" U/H	1	1	1	1	1	1
2	DS47	Nut, gearbox pivot bolt	1	1	1	1	1	1
3	PCW73A	Washer, gearbox pivot bolt	1	1	1	1	1	1
4	F4422	Eyebolt, gearbox adjuster	1	1	1	1	1	1
5	GS203	Washer, eyebolt nut	2	2	2	2	2	2
6	SI-51	Nut, gearbox eyebolt	2	2	2	2	2	2
7	F3767	Pivot pin, gearbox adjuster	1	1	1	1	1	1
8	S26-1	Washer, pivot pin	1	1	1	1	1	1
9	PO172A	Nut, pivot pin	1	1	1	1	1	1
		SHAFTS AND GEARS (STANDARD RATIO)						
		(See page 43 for wide and close ratio gears)						
10	T914	Mainshaft and low gear (16T)	1	1	1	1	1	1
11	PT108B	Bush, mainshaft for clutch rod	1	1	1	1	1	1
12	S66-1	Woodruff key No. 6	1	1	1	1	1	1
13	T1047	Nut, clutch to mainshaft	1	1	1	1	1	1
14	T1045	Washer, clutch to mainshaft, plain ...	1	1	1	1	1	1
15	T1046	Washer, clutch to mainshaft, lock	1	1	1	1	1	1
16	T1382	Gear, mainshaft high (26T)	1	1	1	1	1	1
17	T1370	Bush, mainshaft high gear	1	1	1	1	1	1
18	T917	Gear, mainshaft 3rd (24T)	1	1	1	1	1	1
19	T916	Gear, mainshaft 2nd (20T)	1	1	1	1	1	1
20	T1063	Layshaft c/w high gear (20T) and speedometer gear	1	1	1	1	1	1
21	T930	Gear, layshaft 3rd (22T)	1	1	1	1	1	1
22	T1065	Gear, layshaft 2nd (26T)	1	1	1	1	1	1
23	T926	Gear, layshaft low (30T)	1	1	1	1	1	1
24	T928	Bush, layshaft low gear	1	1	1	1	1	1
		For speedometer drive gears see page 108.						
		GEARBOX CASING BEARINGS						
25	T448	Bearing, high gear	1	1	1	1	1	1
26	T946	Oil seal, high gear bearing	1	1	1	1	1	1
27	E489	Circlip, high gear bearing retaining	1	1	1	1	1	1
28	S35-7	Bearing, mainshaft	1	1	1	1	1	1
29	T280	Circlip, mainshaft bearing	1	1	1	1	1	1
30	T1367	Bush, layshaft casing and inner cover	2	2	2	2	2	2
31	T912	Peg, layshaft bush	2	2	2	2	2	2
32	T981	Disc, layshaft bush	1	1	1	1	1	1

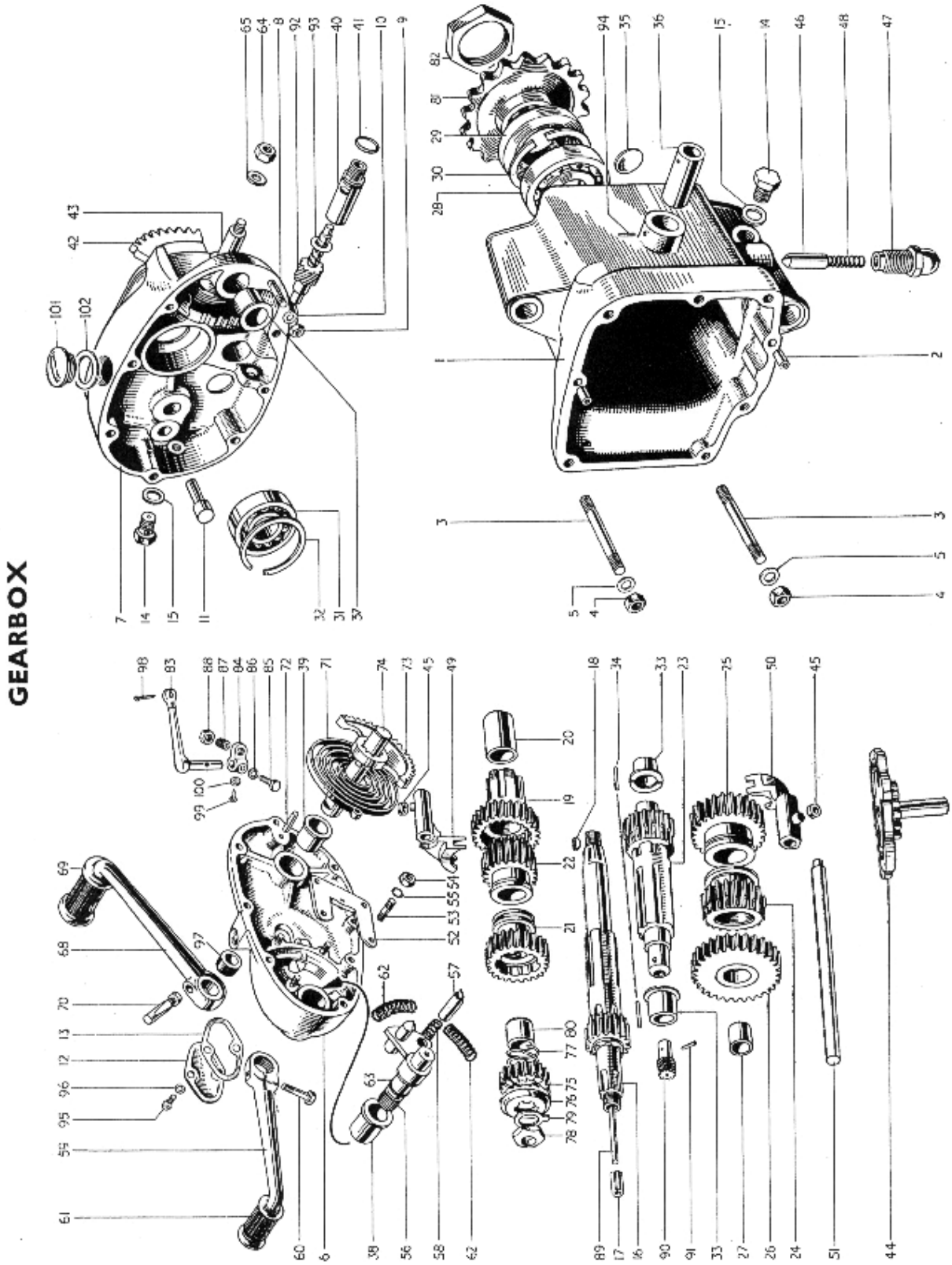

FIG. 10

INDEX FIG. 10

Illust No.	Part No.	Page No.	Ref. No.	Illust. No.	Part No.	Page No.	Ref. No.	Illust. No.	Part No.	Page No.	Ref. No.
1	T1201	36	7	35	T981	37	32	70	T1222	41	1
2	T989	36	8	36	T341	40	1	71	T31	41	2
3	E698	36	9	37	T412	40	3	72	T47	41	3
4	S1-51	36	10	38	T57	40	4	73	T25A	41	4
5	S25-3	36	11	39	T23	40	5	74	T24A	41	5
6	T1534	36	21	40	T933	40	6	75	T730	41	6
7	T1531	36	12	41	T948	40	7	76	T731	41	7
8	T323A	36	13	42	T397	40	8	77	T1250	41	9
9	S1-51	36	14	43	T399	40	9	78	NT297	41	10
10	S25-3	36	15	44	T500	40	10	79	T732	41	11
11	T45	36	18	45	NT261	40	11	80	T1338	41	8
12	T1542	36	26	46	T44	40	12	81	T471A	41	12
13	T1541	36	27	47	T372	40	13	82	T440	41	13
14	S46-15	36	30	48	T373	40	14	83	T1539	42	1
15	PT104B	36	31	49	T260B	40	15	84	T1536	42	3
16	T914	37	10	50	T913	40	16	85	T1554	42	6
17	PT108B	37	11	51	T291	40	17	86	E2312	42	7
18	S66-1	37	12	52	T407	40	18	87	T413	42	8
19	T1382	37	16	53	T454	40	19	88	T453	42	9
20	T1370	37	17	54	F879	40	20	89	T1551	42	10
21	T917	37	18	55	E2312	40	21		T1552	42	11
22	T916	37	19	56	T408/1540	40	22	90	T924	108	1
23	T1063	37	20	57	T406	40	24	91	T925	108	3
24	T930	37	21	58	T405	40	25	92	T934	108	4
25	T1065	37	22	59	T1194	40	26	93	T825	108	6
26	T926	37	23	60	W932	40	28	94	E3449	40	2
27	T928	37	24	61	T449	40	29	95	T1553	36	29
28	T448	37	25	62	T404	40	30	96	E2312	36	28
29	T946	37	26	63	E3309	40	23	97	T1512	40	35
30	E489	37	27	64	T224	40	31	98	Split pin	42	2
31	S35-7	37	28	65	S25-3	40	32	99	E3412	42	5
32	T280	37	29	68	T451	40	33	100	T1538	42	4
33	T1367	37	30	69	F1814	40	41	101	E732	36	19
34	T912	37	31					102	NE507	36	20

GROUP 4 — GEARBOX

REF. No.	PART No.	DESCRIPTION	5T	6T	TR5	T100	T110	TR6
1	T341	Bush, gear selector camplate	1	1	1	1	1	1
2	E3449	Peg, gear selector camplate bush	1	1	1	1	1	1
3	T412	Bush, footchange spindle inner	1	1	1	1	1	1
4	T57	Bush, footchange spindle outer	1	1	1	1	1	1
5	T23	Bush, kickstarter outer	1	1	1	1	1	1
6	T933	Bush, speedo gear inner cover	1	1	1	1	1	1
7	T948	Washer, speedo gear bush sealing	1	1	1	1	1	1
		GEAR CHANGE SELECTOR MECHANISM						
8	T397	Quadrant, gear operating	1	1	1	1	1	1
9	T399	Spindle, gear operating quadrant	1	1	1	1	1	1
		Split pin 1½" × 5/64" dia....	1	1	1	1	1	1
10	T500	Camplate, gear control	1	1	1	1	1	1
11	NT261	Roller, gear control camplate	2	2	2	2	2	2
12	T44	Plunger, gear control camplate	1	1	1	1	1	1
13	T372	Bush, gear control camplate plunger ...	1	1	1	1	1	1
14	T373	Spring, gear control camplate plunger ...	1	1	1	1	1	1
15	T260B	Fork, gear selector mainshaft	1	1	1	1	1	1
16	T913	Fork, gear selector layshaft	1	1	1	1	1	1
17	T291	Rod, gear selector fork	1	1	1	1	1	1
18	T407	Plate, quadrant guide	1	1	1	1	1	1
19	T454	Stud, quadrant guide plate ⅞" O/A	4	4	4	4	4	4
20	F879	Nut, quadrant guide plate stud	4	4	4	4	4	4
21	E2312	Washer, quadrant guide plate stud	4	4	4	4	4	4
22	T408/1540	Quadrant, gearchange	1	1	1	1	1	1
23	E3309	"O" ring, gearchange quadrant	1	1	1	1	1	1
24	T406	Plunger, gear quadrant	2	2	2	2	2	2
25	T405	Spring, gear quadrant plunger	2	2	2	2	2	2
26	T1194	Pedal, gearchange	1	1	1	1	1	1
27	T997	Pedal, gearchange (Heel and Toe) (Alternative equipment)	A	A	A	A	A	A
28	W932	Set screw, gearchange pedal 1" U/H ...	1	1	1	1	1	1
29	T449	Rubber, gearchange pedal	1	1	1	1	1	1
30	T404	Spring, gearchange pedal return	2	2	2	2	2	2
31	T224	Nut, gear quadrant spindle	1	1	1	1	1	1
32	S25-3	Washer, gear quadrant spindle	1	1	1	1	1	1
		KICKSTARTER						
33	T451	Crank, kickstarter (rigid)	1	1	—	1	1	—
34	*T1270	Crank, kickstarter (folding) complete ...	A	A	1	A	A	1
35	T1512	Tube, kickstarter shaft rubber	1	1	1	1	1	1
36	T1271	Lever, kickstarter	A	A	1	A	A	1
37	T1272	Pedal, kickstarter	A	A	1	A	A	1
38	T1273	Bolt, lever to pedal 1.155" U/H	A	A	1	A	A	1
39	S70-3	Ball, pedal locating	A	A	1	A	A	1
40	T1167	Spring, pedal locating ball	A	A	1	A	A	1
41	F1814	Rubber, kickstarter pedal	1	1	1	1	1	1

* *Fitted to T100 and T110 machines for export to U.S.A.*

REF. No.	PART No.	DESCRIPTION	5T	6T	TR5	T100	T110	TR6
1	T1222	Cotter pin c/w nut and washer	1	1	1	1	1	1
2	T31	Spring, k/s crank return	1	1	1	1	1	1
3	T47	Peg, k/s anchor	1	1	1	1	1	1
4	T25A	Quadrant, kickstarter	1	1	1	1	1	1
5	T24A	Shaft, kickstarter axle	1	1	1	1	1	1
6	T730	Pinion, kickstarter	1	1	1	1	1	1
7	T731	Ratchet, kickstarter	1	1	1	1	1	1
8	T1338	Sleeve, kickstarter pinion	1	1	1	1	1	1
9	T1250	Spring, kickstarter pinion	1	1	1	1	1	1
10	NT297	Nut, kickstarter ratchet	1	1	1	1	1	1
11	T732	Washer, kickstarter lock	1	1	1	1	1	1
		GEARBOX SPROCKET						
12	T471A	Sprocket, gearbox	1	1	1	1	1	1
13	T440	Nut, gearbox sprocket locking	1	1	1	1	1	1
		CLUTCH AND SHOCK ABSORBER						
14	T1360	Clutch assembly	1	—	—	—	—	—
15	T1548	Clutch assembly	—	1	1	1	1	1
16	T940	Housing clutch sprocket	1	—	—	—	—	—
17	T1549	Housing clutch sprocket	—	1	1	1	1	1
18	T1037	Centre, clutch	1	—	—	—	—	—
19	T1038	Centre, clutch	—	1	1	1	1	1
20	T1039	Plate, inner retaining shock absorber ...	1	1	1	1	1	1
21	T1040	Screw, inner retaining shock absorber 0.417"	4	4	4	4	4	4
		U/H	1	1	1	1	1	1
22	T1041	Spider, clutch shock absorber	4	4	4	4	4	4
23	T1472	Rubber insert, clutch shock absorber (drive)	4	4	4	4	4	4
24	T1473	Rubber insert, clutch shock absorber (rebound)	1	1	1	1	1	1
25	T1044	Plate, outer retaining shock absorber ...						
26	T1040	Screw, outer retaining shock absorber 0.417"						
		U/H	4	4	4	4	4	4
27	T418	Hub, clutch	1	1	1	1	1	1
28	T394	Roller, clutch housing to hub	20	20	20	20	20	20
29	T1362	Plate, clutch driving (bonded)	4	5	5	5	5	5
30	T1363	Plate, clutch driven (plain)	5	6	6	6	6	6
31	T429	Spring, clutch pressure	4	—	—	—	—	—
32	T999	Spring, clutch pressure	—	4	4	4	4	4
33	T423	Pin, clutch pressure spring 1 18/32" U/H ...	4	—	—	—	—	—
34	T423A	Pin, clutch pressure spring 1 27/32" U/H ...	—	4	4	4	4	4
35	T427	Nut, clutch pressure spring pin	4	4	4	4	4	4
36	T425	Cup, clutch pressure spring	4	—	—	—	—	—
37	T998	Cup, clutch pressure spring	—	4	4	4	4	4
38	T986	Plate, clutch pressure c/w button	1	1	1	1	1	1
39	T422	Button, clutch pressure plate	1	1	1	1	1	1

REF. No.	PART No.	DESCRIPTION	5T	6T	TR5	T100	T110	TR6
		CLUTCH CONTROL						
1	T1539	Lever, clutch operating	1	1	1	1	1	1
2	$\frac{1}{16}'' \times \frac{5}{8}''$	Split pin, cable to lever	1	1	1	1	1	1
3	T1536	Arm, clutch lever c/w roller	1	1	1	1	1	1
4	T1538	Roller, clutch arm	1	1	1	1	1	1
5	E3412	Pin, roller to arm	1	1	1	1	1	1
6	T1554	Peg, clutch operating lever	1	1	1	1	1	1
7	E2312	Washer, clutch operating lever peg	1	1	1	1	1	1
8	T413	Pin, clutch lever adjusting	1	1	1	1	1	1
9	T453	Nut, clutch lever adjusting lock	1	1	1	1	1	1
10	T1551	Rod, clutch operating	1	—	—	—	—	—
11	T1552	Rod, clutch operating	—	1	1	1	1	1

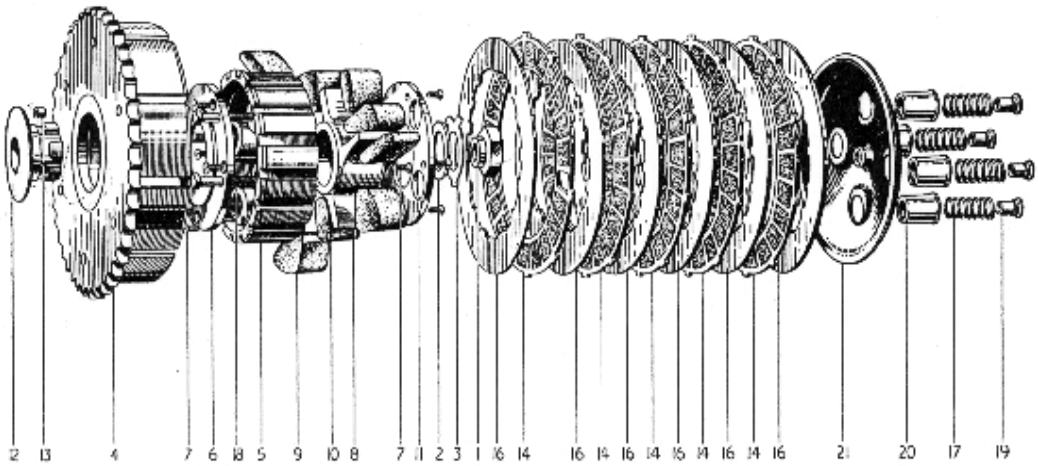

FIG. 11. CLUTCH AND SHOCK ABSORBER

INDEX FIG. 11

Illust. No.	*Part No.*	*Page No.*	*Ref. No.*	*Illust. No.*	*Part No.*	*Page No.*	*Ref. No.*
1	T1047	37	13	12	T418	41	27
2	T1045	37	14	13	T394	41	28
3	T1046	37	15	14	T1362	41	29
4	T940	41	16	16	T1363	41	30
	T1549	41	17	17	T429	41	31
5	T1037	41	18		T999	41	32
	T1038	41	19	18	T423	41	33
6	T1039	41	20		T423A	41	34
7	T1040	41	21	19	T427	41	35
8	T1041	41	22	20	T425	41	36
9	T1472	41	23		T998	41	37
10	T1473	41	24	21	T986	41	38
11	T1044	41	25				

WIDE RATIO GEARS — GROUP 5
STANDARD RATIO GEARS — GROUP 6
CLOSE RATIO GEARS — GROUP 7

REF. No.	PART No.	DESCRIPTION	5T	6T	TR5	T100	T110	TR6
		WIDE RATIO GEARS—GROUP 5						
		To convert from standard to wide ratio						
1	T1384	Gear, mainshaft high 28T	1	1	1	1	1	1
2	T968	Gear, mainshaft 2nd 19T	1	1	1	1	1	1
3	T971	Gear, layshaft high 18 T c/w speedo gear ...	1	1	1	1	1	1
4	T974	Gear, layshaft 2nd 27T	1	1	1	1	1	1
5	T975	Gear, speedometer driven	1	1	1	1	1	1
		STANDARD RATIO GEARS—GROUP 6						
		To convert from wide to standard ratio						
6	T1382	Gear, mainshaft high 26T	1	1	1	1	1	1
7	T916	Gear, mainshaft 2nd 20T	1	1	1	1	1	1
8	T1063	Gear, layshaft high 20T c/w speedo gear ...	1	1	1	1	1	1
9	T1065	Gear, layshaft 2nd 26T	1	1	1	1	1	1
10	T934	Gear, speedometer driven	1	1	1	1	1	1
		CLOSE RATIO GEARS—GROUP 7						
11	T1177	Mainshaft and low gear 18T	1	1	1	1	1	1
12	T1383	Gear, mainshaft high 24T	1	1	1	1	1	1
13	T955	Gear, mainshaft 2nd 21T	1	1	1	1	1	1
14	T1179	Gear, mainshaft 3rd 23T	1	1	1	1	1	1
15	T959	Layshaft and high gear 22T	1	1	1	1	1	1
16	T961	Gear, layshaft low 28T	1	1	1	1	1	1
17	T963	Gear, layshaft 2nd 25T	1	1	1	1	1	1
18	T964	Gear layshaft 3rd 23T	1	1	1	1	1	1
19	T983	Plug, speedometer drive sealing	1	1	1	1	1	1
20	T948	Washer, speedometer drive plug	1	1	1	1	1	1

Gear Ratios. Suitable ratios can be selected from the three groups which will enable the rider to operate his machine for normal road work or sporting events. To vary the ratios of any group, engine sprockets ranging from 17 to 25 teeth are available.

On the page opposite there will be found a R.P.M. and Gear Ratio Chart, which will assist the rider in making his selection.

ENGINE REVOLUTIONS PER MINUTE

M.P.H. \ GEAR RATIO	4.4	4.57	4.78	5.0	5.24	5.5	5.7	5.8	6.0	6.25	6.5	6.9	7.06	7.14	7.5	8.0	8.85	9.8	10.6	11.58	12.2	13.9	14.3	15.25	16.0	17.8	18.85
20	1144	1188	1244	1300	1364	1428	1480	1508	1560	1624	1688	1796	1836	1856	1948	2080	2300	2548	2756	3012	3172	3612	3720	3964	4160	4628	4900
25	1430	1485	1555	1625	1705	1785	1850	1885	1950	2030	2110	2245	2295	2320	2435	2600	2875	3185	3445	3765	3965	4515	4650	4955	5200	5785	6125
30	1716	1782	1866	1950	2046	2142	2220	2262	2340	2435	2532	2694	2754	2784	2922	3120	3450	3822	4134	4518	4758	5418	5585	5946	6240	6942	—
35	2002	2079	2177	2275	2387	2499	2590	2639	2730	2842	2954	3143	3213	3248	3409	3640	4025	4459	4823	5271	5551	6321	6510	6937	—	—	
40	2288	2376	2488	2600	2728	2856	2960	3016	3120	3248	3376	3592	3672	3712	3896	4160	4600	5096	5512	6024	6344						
45	2574	2673	2799	2925	3069	3213	3330	3393	3510	3554	3798	4041	4131	4176	4383	4680	5175	5733	6201	6777	7137						
50	2860	2970	3110	3250	3410	3570	3700	3770	3900	4060	4220	4490	4590	4640	4870	5200	5750	6370	6890								
55	3146	3267	3421	3575	3751	3927	4070	4147	4290	4466	4642	4939	5049	5104	5357	5720	6325	7007									
60	3432	3564	3732	3900	4092	4284	4440	4524	4680	4872	5064	5388	5508	5568	5844	6240	6900										
70	4004	4158	4354	4550	4774	4998	5180	5278	5460	5684	5908	6286	6426	6496	6331	6760											
80	4576	4752	4976	5200	5456	5712	5920	6032	6240	6496	6752	7184	7344	7424													
90	5148	5346	5598	5850	6138	6426	6660	6786	7020	7308																	
100	5720	5940	6220	6500	6820	7140	7400	7540																			
110	6292	6534	6842	7150	7502	7854																					

NOTE.—Engine R-P-M are calculated in conjunction with 3.50 × 19 Rear tyre equipment—780 R-P-Mile—and will deviate slightly from above figures for models not so equipped.

4.00 × 18 Rear Tyre 785 R-P-Mile. 3.25 × 19 Rear Tyre 793 R-P-Mile. 4.00 × 19 Rear Tyre 756 R-P-Mile.

GEAR RATIOS

GEARS	STANDARD RATIO				WIDE RATIO				CLOSE RATIO			
Engine Sprocket	Top	3rd	2nd	1st	Top	3rd	2nd	1st	Top	3rd	2nd	1st
Gearbox Reduction	1.00	1.19	1.69	2.44	1.00	1.42	2.21	2.91	1.00	1.09	1.30	1.69
17	6.46	7.7	10.94	15.8	6.46	9.22	14.30	18.85	6.46	7.06	8.42	11.00
18	6.10	7.28	10.32	14.9	6.10	8.70	13.50	17.80	6.10	6.66	7.95	10.40
19	5.80	6.9	9.8	14.15	5.80	8.25	12.80	16.85	5.80	6.32	7.54	9.84
20	5.50	6.55	9.3	13.4	5.50	7.84	12.18	16.0	5.50	6.00	7.15	9.35
21	5.24	6.24	8.85	12.8	5.24	7.46	11.58	15.25	5.24	5.72	6.81	8.90
22	5.00	5.95	8.45	12.2	5.00	7.13	11.05	14.55	5.00	5.45	6.50	8.50
23	4.78	5.69	8.09	11.69	4.78	6.82	10.60	13.90	4.78	5.23	6.23	8.12
24	4.57	5.45	7.75	11.2	4.57	6.54	10.14	13.35	4.57	5.00	5.96	7.78
25	4.40	5.24	7.45	10.75	4.40	6.26	9.73	12.80	4.40	4.80	5.73	7.46

EXHAUST SYSTEM—GROUP 8

EXHAUST PIPES

REF. No.	PART No.	DESCRIPTION	5T	6T	TR5	T100	T110	TR6
1	E3426	Pipe, exhaust, L.H.	1	1	—	—	—	—
2	E3350	Pipe, exhaust, R.H.	1	1	—	—	—	—
3	E3462	Pipe, exhaust, L.H.	—	—	1	—	—	—
4	E3463	Pipe, exhaust, R.H.	—	—	1	—	—	—
5	E3629	Pipe, exhaust, L.H.	—	—	—	1	—	—
6	E3633	Pipe, exhaust, R.H.	—	—	—	1	—	—
7	E3628	Pipe, exhaust, L.H.	—	—	—	—	1	—
8	E3632	Pipe, exhaust, R H.	—	—	—	—	1	—
9	E3472	Pipe, exhaust, L.H.	—	—	—	—	—	1
10	E3473	Pipe, exhaust, R.H.	—	—	—	—	—	1
11	E1269	Clip, pipe to head	2	2	2	—	2	2
12	E1270	Clip, pipe to head	—	—	—	2	—	—
13	E3469	Clip, exhaust to extension pipe	—	—	1	—	—	1
14	E409	Bolt, exhaust clip 1 3/16" U/H	2	2	2	2	2	2
15	E410A	Washer, exhaust clip bolt	2	2	2	2	2	2
16	TE164E	Bolt, exhaust clip 1 3/16" U/H	—	—	1	—	—	1
17	TE164C	Nut, exhaust clip bolt (D shape)	—	—	1	—	—	1
18	TE164D	Washer, exhaust clip bolt (D shape)	—	—	1	—	—	1
19	E2989	Bracket, exhaust pipe to engine plate (L.H.)	1	1	—	1	1	—
20	E2990	Bracket, exhaust pipe to engine plate (R.H.)	1	1	—	1	1	—
21	DS57	Bolt, exhaust pipe to bracket 7/16" U/H ...	2	2	—	2	2	—
22	S26-2	Washer, exhaust pipe to bracket bolt ...	2	2	1	2	2	1
23	FB79	Nut, exhaust pipe to bracket bolt	2	2	1	2	2	1
24	F1369	Bolt, exhaust pipe clip 5/8" U/H	—	—	1	—	—	1
25	F1699	Clip, pipe to backstay	—	—	1	—	—	1

SILENCERS

REF. No.	PART No.	DESCRIPTION	5T	6T	TR5	T100	T110	TR6
26	E3651	Silencer, L.H.	1	1	—	—	—	—
27	E3652	Silencer, R.H.	1	1	—	—	—	—
28	E3470	Silencer	—	—	1	—	—	1
29	E3817	Silencer, L.H.	—	—	—	1	1	—
30	E3816	Silencer, R.H.	—	—	—	1	1	—
31	DS55	Bolt, silencer hanger 1 5/16" U/H	2	2	—	2	2	—
32	F1213	Bolt, silencer hanger 11/16" U/H	—	—	1	—	—	1
33	SI-51	Nut, silencer hanger bolt	2	2	1	2	2	1
34	S25-3	Washer, silencer hanger bolt nut	2	2	1	2	2	1
35	E3767	Clip, silencer to exhaust pipe	2	2	—	2	2	—
36	E3469	Clip, silencer to exhaust pipe	—	—	1	—	—	1
37	TE164E	Bolt, silencer to exhaust pipe clip 1 3/16" U/H	—	—	1	—	—	1
38	TE164C	Nut, silencer to exhaust pipe clip	—	—	1	—	—	1
39	TE164D	Washer, silencer to exhaust pipe clip ...	—	—	1	—	—	1

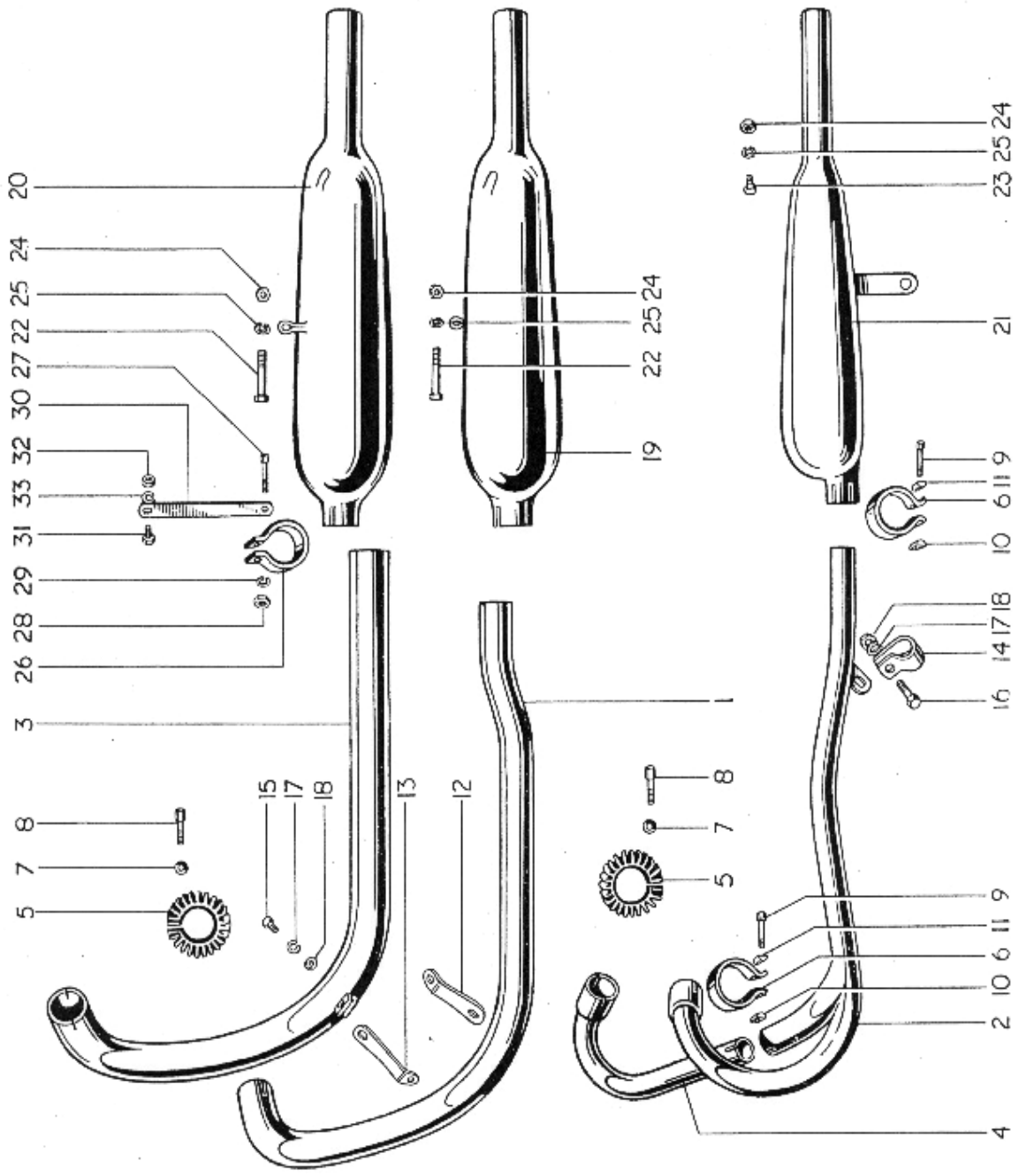

FIG. 12. EXHAUST PIPES AND SILENCERS

REF. No.	PART No.	DESCRIPTION	5T	6T	TR5	T100	T110	TR6
1	F3430	Bolt, silencer to exhaust pipe clip ⅜" U/H	2	2	—	2	2	—
2	E3768	Washer, clip bolt nut (D shape)	4	4	—	4	4	—
3	E1310	Nut, clip bolt	2	2	—	2	2	—
4	F4141	Stay, clip bolt to frame	2	2	—	2	2	—
5	F3641	Stud, stay to frame 11/16" O/A	1	1	—	1	1	—
6	S26-3	Washer, fixing nut	1	1	—	1	1	—
7	S1-51	Nut, stay stud	1	1	—	1	1	—

INDEX FIG. 12

Illust. No.	*Part No.*	*Page No.*	*Ref. No.*	*Illust. No.*	*Part No.*	*Page No.*	*Ref. No.*
1	E3426	45	1	15	DS57	45	21
	E3629	45	5	16	F1369	45	24
	E3628	45	7	17	S26-2	45	22
2	E3462	45	3	18	F879	45	23
	E3472	45	9	19	E3651	45	26
3	E3350	45	2		E3817	45	29
	E3633	45	6	20	E3652	45	27
	E3632	45	8		E3816	45	30
4	E3463	45	4	21	E3470	45	28
	E3473	45	10	22	DS55	45	31
5	E1269	45	11	23	F1213	45	32
	E1270	45	12	24	S1-51	45	33
6	E3469	45	13	25	S25-3	45	34
7	E410A	45	15	26	E3767	45	35
8	E409	45	14	27	F3430	47	1
9	TE164E	45	16	28	E3768	47	2
10	TE164C	45	17	29	E1310	47	3
11	TE164D	45	18	30	F4141	47	4
12	E2989	45	19	31	F3461	47	5
13	E2990	45	20	32	S1-51	47	7
14	F1699	45	25	33	S26-3	47	6

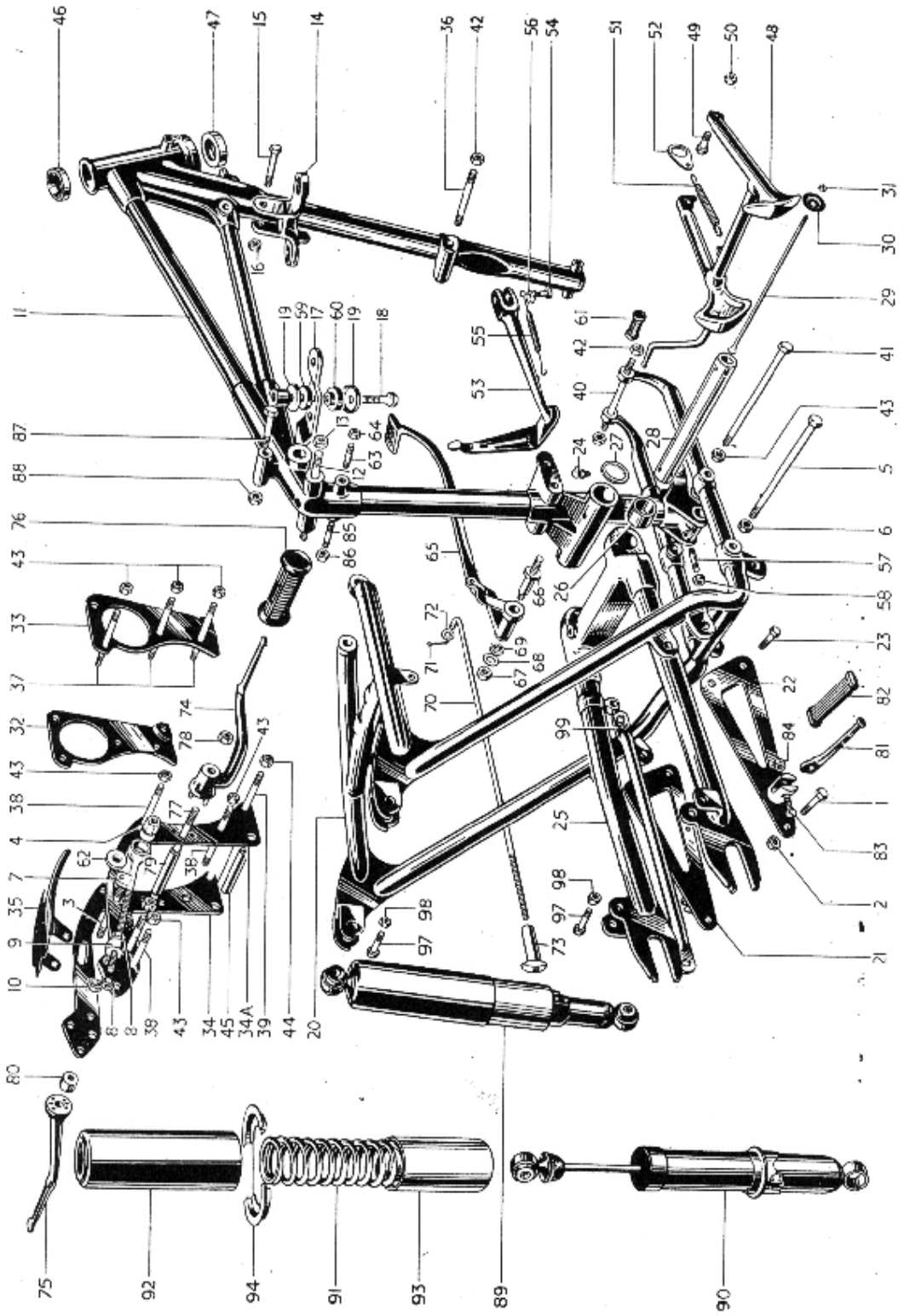

FIG. 13. FRAME

INDEX FIG. 13

Illust. No.	Part No.	Page No.	Ref. No.
1	DS55	45	31
2	S1-51	45	33
3	F3769	36	32
4	F3772	36	35
5	F3575	37	1
6	DS47	37	2
7	F4422	37	4
8	S1-51	37	6
9	F3767	37	7
10	PO172A	37	9
11	F4414	50	1
12	F1561	50	22
13	PO172A	50	23
14	F1841	50	6
	F3900	50	7
15	F1451	50	8
16	S1-52	50	9
17	F4273	50	10
	F4274	50	11
18	F3816	50	15
19	F3814	50	12
20	F3635	50	25
21	F3718	50	26
22	F3580	50	27
23	F2603	50	28
24	KW194	50	32
25	F1431	51	1
26	F3690	51	2
27	F3574	51	3
28	F3564	51	4
29	F3797	51	5
30	F3798	51	6
31	F3799	51	7
32	F2646	52	1
	E2222	52	2
33	F2647	52	3
	E2223	52	4
34	F3760	52	5
34A	F3541	52	6
35	F3571	53	2
36	F2414	53	3
37	F1711	53	4
38	F839	53	5
39	F3665	53	6
40	F1680	53	7
41	F3108	53	8
42	DS47	53	9
43	PO172A	53	10
44	S1-52	53	11
45	F862	58	14
46	H111	58	26
47	H111	58	26
48	F4304	51	19
49	F3619	51	20
50	F2725	51	22
51	F3617	51	23
52	F3618	51	24
53	F3723	51	26
54	F3097	51	27
55	F1610	51	28
56	F3096	51	29
57	F3641	47	5
58	S1-51	47	7
59	F967	50	13
60	F3815	50	14
61	T449	51	25
62	F3770	36	33
63	F3641	74	11
64	F1008	74	12
65	F3595	83	1
66	F867	83	2
67	S1-52	83	5
68	S25-2	83	6
69	S26-16	83	7
70	F3597	83	8
71	Split pin	83	9
72	S25-13	83	10
73	F3667	83	12
74	F3593	83	13
75	F987	83	14
76	NF704	83	15
77	F3592	83	16
78	DS48	83	17
79	F862	83	19
80	T87	83	20
81	F1694	83	21
82	F1695	83	22
83	F2271	83	23
84	S1-51	83	24
85	F3641	84	11
86	F1008	84	12
87	E2593	107	3
	F3006	107	4
88	S1-51	107	6
89	See page 108		
90	See page 108		
91	See page 108		
92	9054/151	108	17
93	9054/47	108	18
94	9054/171	108	16
97	E2113	108	24
98	PO172A	108	26
99	F3774	51	8

GROUP 9 – FRAME

REF. No.	PART No.	DESCRIPTION	5T	6T	TR5	T100	T110	TR6
		FRONT PORTION						
1	F4414	Frame, front portion	1	1	1	1	1	1
2	F3906	Bolt, steering stop $\frac{9}{16}$" U/H	2	2	2	2	2	2
3	T224	Locknut, stop bolt	2	2	2	2	2	2
4	D402/3	Lock, steering head c/w keys	A	A	A	A	A	A
5	D403	Key, lock (state number)	A	A	A	A	A	A
6	F1841	Support, petrol tank front	1	1	—	1	1	—
7	F3900	Support, petrol tank front (Export Tigers only)	—	—	1	A	A	1
8	F1451	Bolt, petrol tank front support $2\frac{1}{16}$" U/H	1	1	1	1	1	1
9	SI-52	Nut, petrol tank front support	1	1	1	1	1	1
10	F4273	Support, petrol tank rear	1	—	1	1	1	1
11	F4274	Support, petrol tank rear	—	1	—	—	—	—
12	F3814	Cup, tank support rubbers	4	4	4	4	4	4
13	F967	Washer, rubber top	2	2	2	2	2	2
14	F3815	Washer, rubber spigotted lower	2	2	2	2	2	2
15	F3816	Bolt, tank support to frame $1\frac{3}{16}$" U/H ...	2	2	2	2	2	2
16	E3308	Stay, engine to frame torque	2	2	2	2	2	2
17	F2603	Bolt torque stay to frame lug $\frac{13}{16}$" U/H ...	1	1	1	1	1	1
18	SI-51	Nut, torque stay bolt	1	1	1	1	1	1
19	S26-3	Washer, torque stay bolt	1	1	1	1	1	1
20	SI-52	Nut, torque stay to engine bolt	2	2	2	2	2	2
21	S26-1	Washer, torque stay to engine bolt	2	2	2	2	2	2
22	F1561	Stud, seat lug to back stays $5\frac{5}{16}$" O/A ...	1	1	1	1	1	1
23	PO172A	Nut, seat lug to back stays stud	2	2	2	2	2	2
24	S26-1	Washer, seat lug to back stays stud	2	2	2	2	2	2

SEE FRONT FORK GROUP FOR STEERING RACES PAGE 58

		REAR PORTION						
25	F3635	Frame, rear portion	1	1	1	1	1	1
26	F3718	Support bracket L.H. silencer	1	1	1	1	1	1
27	F3580	Support bracket R.H. silencer	1	1	1	1	1	1
28	F2603	Bolt, bracket to frame $\frac{13}{16}$" U/H	1	1	1	1	1	1
29	E1396	Stud, bracket to frame $1\frac{1}{16}$" O/A	2	2	2	2	2	2
30	SI-51	Nut, bracket to frame bolts and stud ...	3	3	3	3	3	3
31	S26-3	Washer, bracket to frame bolts and stud ...	3	3	3	3	3	3
32	KW194	Lubricator, swinging fork	1	1	1	1	1	1
33	WE170	Washer, lubricator	1	1	1	1	1	1

ALWAYS QUOTE COLOURS WHEN ORDERING FRAME PARTS.

REF. No.	PART No.	DESCRIPTION	5T	6T	TR5	T100	T110	TR6
		SWINGING FORK						
1	F4131	Swinging fork assy. c/w bushes	1	1	1	1	1	1
2	F3690	Bush, fork lug	2	2	2	2	2	2
3	F3574	Spacing washer, R.H.	1	1	1	1	1	1
4	F3564	Spindle, S/Fork	1	1	1	1	1	1
5	F3797	Rod, cap retaining	1	1	1	1	1	1
6	F3798	Cap, spindle retaining	2	2	2	2	2	2
7	F3799	Nut, cap retaining	1	1	1	1	1	1
8	F3774	Stay, rear brake torque	1	1	1	1	1	1
9	F3780	Bolt, stay to fork 1 1/16" U/H	1	1	1	1	1	1
10	DS47	Nut, stay bolt	1	1	1	1	1	1
11	PCW73A	Washer, stay bolt nut	1	1	1	1	1	1

STAND—GROUP 10

REF. No.	PART No.	DESCRIPTION	5T	6T	TR5	T100	T110	TR6
		FRONT STAND						
12	H412	Front stand	1	1	1	1	1	1
13	DS55	Bolt, front guard to stand 13/16" U/H	1	1	1	1	1	1
14	SI-51	Nut, front guard to stand bolt...	1	1	1	1	1	1
15	NS362	Nut, front stand to guard spigot	1	1	1	1	1	1
16	H424	Screw, front stand to fork pivot 39/64" U/H	2	2	2	2	2	2
17	S25-3	Washer, pivot screw plain	2	2	2	2	2	2
18	H425	Washer, pivot screw spring	2	2	2	2	2	2
		CENTRE STAND						
19	F4304	Centre stand	1	1	1	1	1	1
20	F3619	Pivot bolt, stand to frame 1 5/16" U/H ...	2	2	2	2	2	2
21	F4484	Tab washer	2	2	2	2	2	2
22	F2725	Nut, stand to frame bolt	2	2	2	2	2	2
23	F3617	Spring, centre stand	1	1	1	1	1	1
24	F3618	Connecting link, stand spring	1	1	1	1	1	1
25	T449	Rubber, stand pedal	1	1	1	1	1	1
		PROP STAND						
26	F3723	Prop stand	1	1	1	1	1	1
27	F3097	Swivel pin, prop stand 1 1/4" U/H	1	1	1	1	1	1
28	F2610	Spring, tension	1	1	1	1	1	1
29	F3096	Lock washer, swivel pin	1	1	1	1	1	1

REF. No.	PART No.	DESCRIPTION	5T	6T	TR5	T100	T110	TR6

ENGINE PLATE—GROUP 11

1	F2646	Plate, engine front L.H.	1	1	—	—	—	—
2	E2222	Plate, engine front L.H.	—	—	1	1	1	1
3	F2647	Plate, engine front R.H.	1	1	—	—	—	—
4	E2223	Plate, engine front R.H.	—	—	1	1	1	1
5	F3760	Plate, engine rear L.H.	1	1	1	1	1	1
6	F3541	Plate, engine rear R.H.	1	1	1	1	1	1
7	F3688	Undershield, crankcase	—	—	1	—	—	1

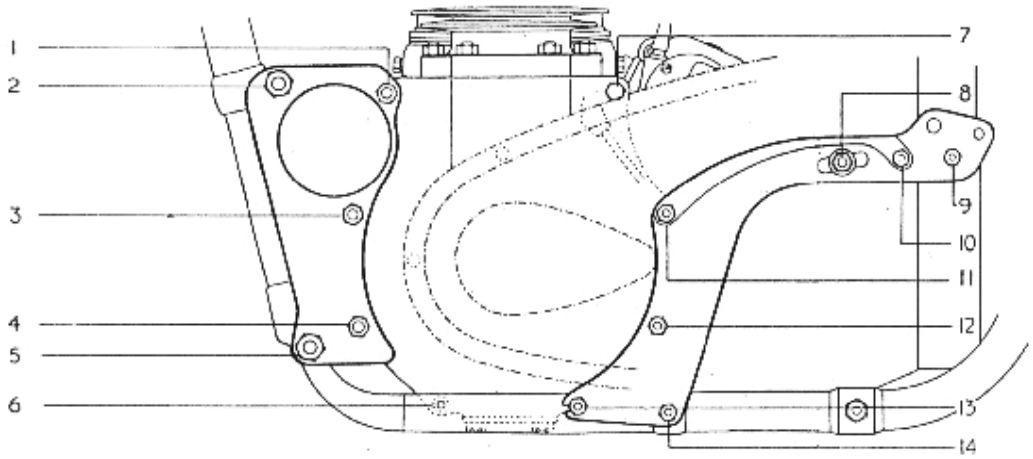

FIG. 14. ENGINE PLATE—STUDS, BOLTS, NUTS AND WASHERS

INDEX FIG. 14

Illust. No.	*Part No.*	*Description*	*Illust. No.*	*Part No.*	*Description*
1, 3 and 4	F1711	Stud	8	F3769	Stud
	PO172A	Nut		F3770	Washer T.S.
	S26-1	Spring Washer		F3771	Nut D.S.
2	F2414	Stud		F3772	Nut T.S.
	DS47	Nut	9, 10, 11 and 12	F839	Stud
	PCW73A	Spring Washer		PO172A	Nut
5	F1680	Stud		S26-1	Spring Washer
	DS47	Nut	13	F3665	Stud
	PCW73A	Spring Washer		S1-52	Nut
6	T456	Stud		S26-1	Spring Washer
	S1-51	Nut	14	F3108	Bolt
	S25-3	Washer		PO172A	Nut
7	E1555	Bolt		S26-1	Spring Washer
	S25-3	Washer			

ENGINE PLATE – GROUP 11
TELESCOPIC FRONT FORK – GROUP 12

REF. No.	PART No.	DESCRIPTION	5T	6T	TR5	T100	T110	TR6
1	E2275	Cover, engine plate front	1	1	1	1	1	1
2	F3571	Cover, engine plate rear	1	1	1	1	1	1
3	F2414	Stud, $\frac{7}{16}$" × $4\frac{1}{8}$" C.E.I.	1	1	1	1	1	1
4	F1711	Stud, $\frac{3}{8}$" × $4\frac{1}{16}$" C.E.I.	3	3	3	3	3	3
5	F839	Stud, $\frac{3}{8}$" × $4\frac{7}{16}$" C.E.I.	4	4	4	4	4	4
6	F3665	Stud, $\frac{3}{8}$" × $4\frac{1}{4}$" C.E.I.	1	1	1	1	1	1
7	F1680	Stud, $\frac{7}{16}$" × $4\frac{3}{8}$" C.E.I.	1	1	1	1	1	1
8	F3108	Bolt, rear engine plate to frame $7\frac{3}{32}$" U/H	1	1	1	1	1	1
9	DS47	Nut, for F2414, F1680 Studs	4	4	4	4	4	4
10	PO172A	Nut, for F1023, F1711, F839 Studs and F3108 bolt	15	15	15	15	15	15
11	SI-52	Nut, for F3665 Stud	2	2	2	2	2	2
12	PCW73A	Washer, for F2414, F1680 Studs	4	4	4	4	4	4
13	S26-1	Washer, for F1711, F839 Studs and F3108 bolt	17	17	17	17	17	17
14	F862	Distance tube for F3108 bolt	1	1	1	1	1	1

FRONT FORK—GROUP 12

15	H1197	Fork assembly	1	—	—	—	—	—
16	H1198	Fork assembly	—	1	—	1	1	—
17	H1200	Fork assembly	—	—	1	—	—	1
18	H663A	Lug, fork head top	1	1	—	1	1	—
19	H380	Lug, fork head top c/w clips	—	—	1	—	—	1
20	F1760	Bolt, fork head top lug pinch $1\frac{11}{16}$" U/H ...	1	1	1	1	1	1
21	H379	Nut, fork head top bolt	1	1	1	1	1	1
22	H660	"U" bolt, handlebar clamp	2	2	—	2	2	—
23	S25-3	Washer, handlebar clamp	4	4	—	4	4	—
24	SI-51	Nut, handlebar clamp	4	4	—	4	4	—
25	H506	Cap, handlebar clamp	—	—	2	—	—	2
26	H436	Bolt, handlebar clamp cap $\frac{7}{8}$" U/H ...	—	—	4	—	—	4
27	H1229	Crown and stem, fork	1	1	1	1	1	1
28	H405	Nut, crown and stem sleeve	1	1	1	1	1	1
29	H941	Bolt, crown and stem to stanchion $2\frac{1}{4}$" U/H	2	2	2	2	2	2
30	E2412	Nut, crown and stem to stanchion	2	2	2	2	2	2
31	S25-2	Washer, crown and stem to stanchion ...	2	2	2	2	2	2

GROUP 12 — TELESCOPIC FRONT FORK

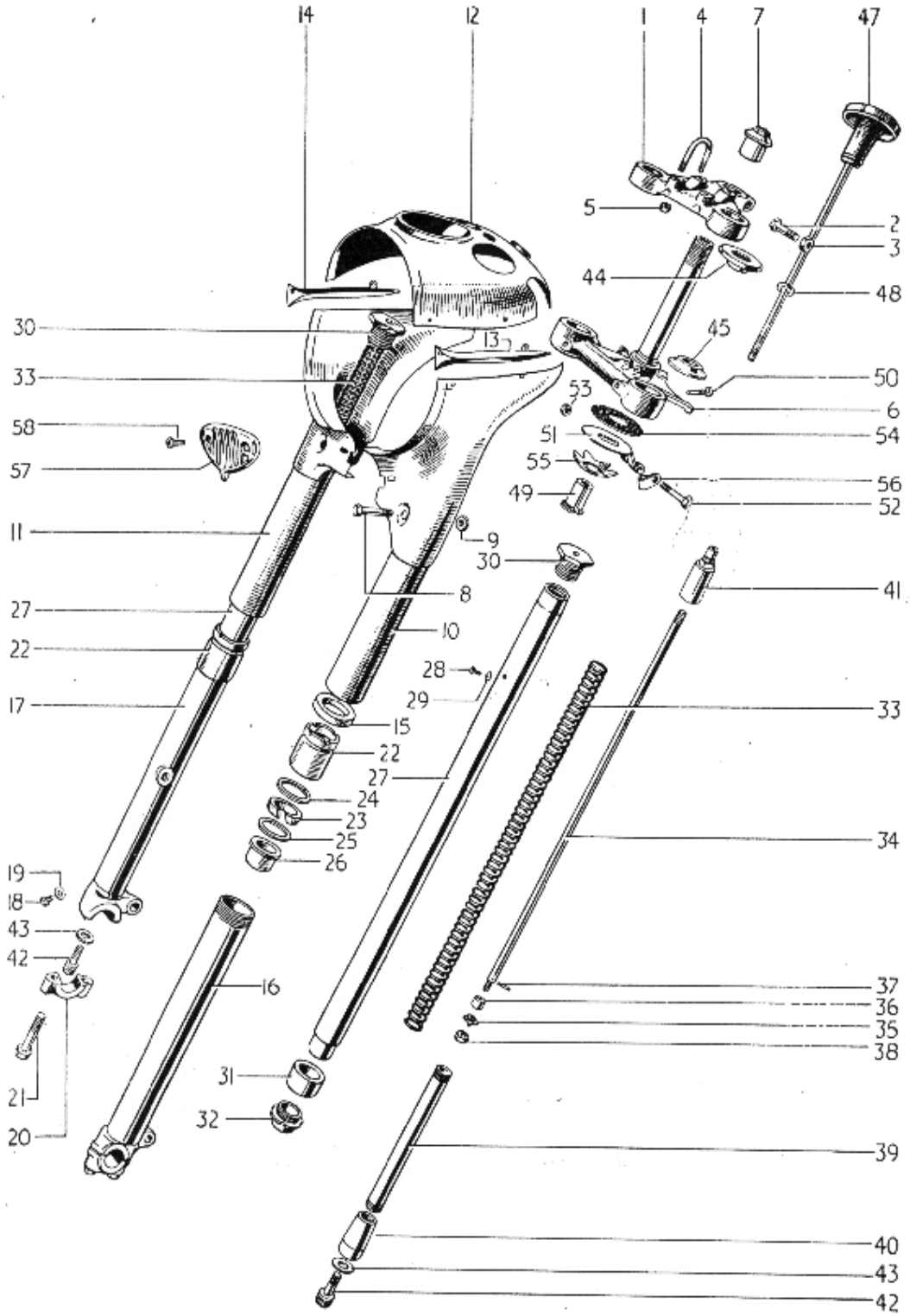

FIG. 15. TELESCOPIC FORK

TELESCOPIC FRONT FORK — GROUP 12

REF. No.	PART No.	DESCRIPTION	5T	6T	TR5	T100	T110	TR6
1	H799	Cover, nacelle L.H.	1	1	—	1	1	—
2	H1205	Cover, nacelle R.H.	1	1	—	1	1	—
3	H963	Cover, top c/w headlamp bracket L.H. ...	—	—	1	—	—	1
4	H964	Cover, top c/w headlamp bracket R.H. ...	—	—	1	—	—	1
5	H962	Gaiter, rubber, telescopic	—	—	2	—	—	2
6	D340	Clip, gaiter top	—	—	2	—	—	2
7	H1206	Top unit, nacelle	1	—	—	—	—	—
8	H1208	Top unit, nacelle	—	1	—	—	—	—
9	H1207	Top unit, nacelle	—	—	—	1	1	—
10	A46	Transfer, Thunderbird	—	1	—	—	—	—
11	H669	Grommet, handlebar rubber	2	2	—	2	2	—
12	H961	Grommet, control cables	3	3	—	3	3	—
13	H689	Screw, top unit to nacelle cover ¼" U/H	2	2	—	2	2	—
14	H691	Nut, for H689	2	2	—	2	2	—
15	E2880	Washer, for H691	2	2	—	2	2	—
16	H623	Motif (flash) L.H.	1	1	—	1	1	—
17	H624	Motif (flash) R.H.	1	1	—	1	1	—
18	H688	Screw, motif front 5/16" U/H	2	2	—	2	2	—
19	H691	Nut, motif front	2	2	—	2	2	—

INDEX FIG. 15

Illust. No.	*Part No.*	*Page No.*	*Ref. No.*	*Illust. No.*	*Part No.*	*Page No.*	*Ref. No.*
1	H663A	53	18	30	H432A	58	6
2	F1760	53	20	31	H443	58	8
3	H379	53	21	32	H444	58	9
4	H660	53	22	33	H384	58	10
5	S1-51	53	24		H505	58	11
6	H1229	53	27		H749	58	12
7	H405	53	28	34	H399A	58	15
8	H941	53	29	35	H452	58	17
9	E2412	53	30	36	H543	58	18
10	H799	55	1	37	H454	58	19
11	H1205	55	2	38	F879	58	20
12	H1206	55	7	39	H394	58	21
	H1208	55	8	40	H1096	58	22
13	H623	55	16	41	H397	58	23
14	H624	55	17	42	H1063	58	24
15	H420	57	3	43	H1062	58	25
16	H1201	57	4	44	H1018	58	27
17	H1202	57	6	45	H439	58	28
18	H1071	57	11	47	H536	58	30
19	H430	57	12	48	H565	58	31
20	H1053	57	8	49	H408	58	32
21	H1070	57	10	50	H409	58	33
22	H390	57	13	51	H413	58	34
23	H391	57	14	52	F1718	58	35
24	H445	57	15	53	S1-51	58	36
25	H431	57	16	54	H435	58	37
26	H441	58	1	55	H95	58	38
27	H382A	58	2	56	F3098	108	9
28	H519A	58	4	57	H992	57	16
29	H430	58	5	58	H993	57	17

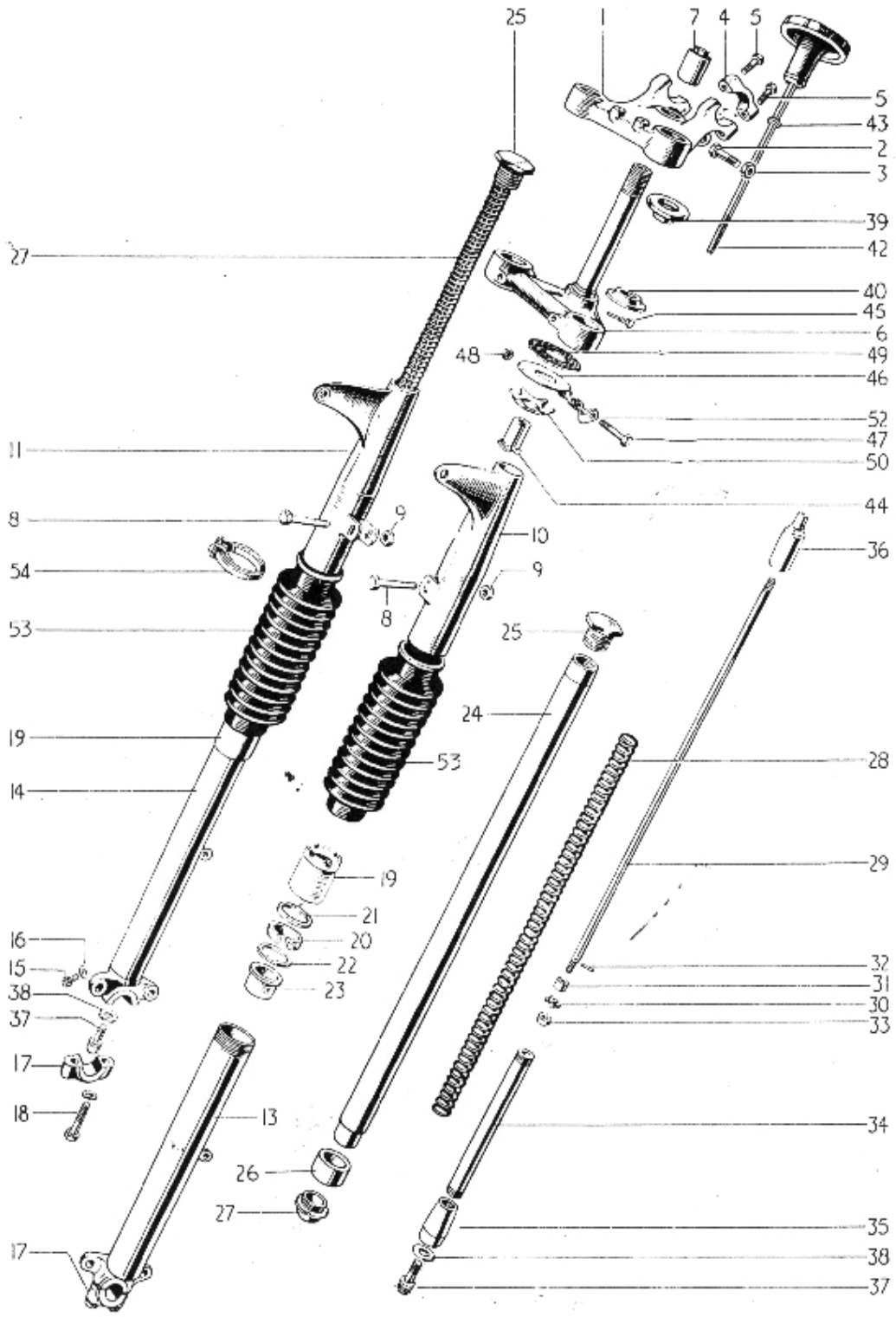

FIG. 16. TELESCOPIC FORK (TROPHY)

TELESCOPIC FRONT FORK — GROUP 12

REF. No.	PART No.	DESCRIPTION	5T	6T	TR5	T100	T110	TR6
1	E2880	Washer, motif front	2	2	—	2	2	—
2	H687	Screw, top unit to nacelle cover $\frac{3}{8}$" U/H	2	2	—	2	2	—
3	H420	Washer, cover tube felt	2	2	—	2	2	—
4	H1201	Bottom member c/w spindle cap, L.H. ...	1	1	—	1	1	—
5	H1203	Bottom member c/w spindle cap, L.H. ...	—	—	1	—	—	1
6	H1202	Bottom wember c/w spindle cap, R.H. ...	1	1	—	1	1	—
7	H1204	Bottom member c/w spindle cap, R.H. ...	—	—	1	—	—	1
8	H1053	Cap, spindle fixing	2	2	2	2	2	2
9	S.26-3	Washer, spring	4	4	4	4	4	4
10	H1070	Bolt, spindle cap, 1 $\frac{7}{16}$" U/H	4	4	4	4	4	4
11	H1071	Plug, drain	2	2	2	2	2	2
12	H430	Washer, drain plug	2	2	2	2	2	2
13	H390	Sleeve, cover tube dust excluder	2	2	2	2	2	2
14	H391	Washer, cover tube dust excluder felt ...	2	2	2	2	2	2
15	H445	Washer, inner—for H391	2	2	2	2	2	2
16	H431	Washer, outer—for H391	2	2	2	2	2	2
17	H992	Horn grille (replaces Pilot Lamp)	1	1	—	1	1	—
18	H993	Screw, grille fixing 0.540" U/H	2	2	—	2	2	—
19	GS299	Washer, shakeproof	2	2	—	2	2	—
20	F3799	Nut, fixing screw	2	2	—	2	2	—

INDEX FIG. 16

Illust. No.	Part No.	Page No.	Ref. No.	Illust. No.	Part No.	Page No.	Ref. No.
1	H380	53	19	27	H444	58	9
2	F1760	53	20	28	H384	58	10
3	H379	53	21	29	H399	58	16
4	H506	53	25	30	H452	58	17
5	H436	53	26	31	H453	58	18
6	H1229	53	27	32	H454	58	19
7	H405	53	28	33	F879	58	20
8	H941	53	29	34	H394	58	21
9	E2412	53	30	35	H1096	58	22
10	H963	55	3	36	H397	58	23
11	H964	55	4	37	H1063	58	24
13	H1203	57	5	38	H1062	58	25
14	H1204	57	7	39	H1018	58	27
15	H1071	57	11	40	H439	58	28
16	H430	57	12	42	H536	58	30
17	H1053	57	8	43	H565	58	31
18	H1070	57	10	44	H408	58	32
19	H390	57	13	45	H409	58	33
20	H391	57	14	46	H413	58	34
21	H445	57	15	47	F1718	58	35
22	H431	57	16	48	S1-51	58	36
23	H441	58	1	49	H435	58	37
24	H382	58	3	50	H95	58	38
25	H432	58	7	52	F3098	108	39
26	H443	58	8	53	H962	55	5
				54	D340	55	6

GROUP 12 — TELESCOPIC FRONT FORK

REF. No.	PART No.	DESCRIPTION	5T	6T	TR5	T100	T110	TR6
1	H441	Bearing, bottom cover tube	2	2	2	2	2	2
2	H382A	Stanchion	2	2	—	2	2	—
3	H382	Stanchion	—	—	2	—	—	2
4	H519A	Plug, stanchion oil filler $\frac{3}{16}$" U/H	2	2	—	2	2	—
5	H430	Washer, stanchion oil filler	2	2	—	2	2	—
6	H432A	Nut, stanchion upper sleeve cap	2	2	—	2	2	—
7	H432	Nut, stanchion upper sleeve cap	—	—	2	—	—	2
8	H443	Bearing, stanchion lower	2	2	2	2	2	2
9	H444	Nut, stanchion hydraulic stop	2	2	2	2	2	2
10	H384	Spring, main (identification RED)	2	2	2	2	2	2
11	H505	Spring, main (identification BLUE) Sidecar ...	A	A	A	A	A	A
12	H749	Spring, main (identification PURPLE) Extra-heavy sidecar	A	A	A	A	A	A
13	H1106	Pressure tube assembly	2	2	—	2	2	—
14	H1107	Pressure tube assembly	—	—	2	—	—	2
15	H399A	Rod, oil pressure	2	2	—	2	2	—
16	H399	Rod, oil pressure	—	—	2	—	—	2
17	H452	Restrictor, oil	2	2	2	2	2	2
18	H453	Cup, oil restrictor rod	2	2	2	2	2	2
19	H454	Pin, oil restrictor rod cup	2	2	2	2	2	2
20	F879	Nut, oil restrictor rod	2	2	2	2	2	2
21	H394	Tube pressure	2	2	2	2	2	2
22	H1096	Body, pressure tube valve	2	2	2	2	2	2
23	H397	Sleeve, pressure tube support	2	2	2	2	2	2
24	H1063	Bolt, valve body to lug $\frac{23}{32}$" U/H	2	2	2	2	2	2
25	H1062	Washer, valve body bolt (aluminium) ...	2	2	2	2	2	2

STEERING CUPS, CONES AND BALLS

26	H111	Cup, frame lug, top and bottom	2	2	2	2	2	2
27	H1018	Cone, head lug, top, c/w dust cover	1	1	1	1	1	1
28	H439	Cone, crown and stem, bottom	1	1	1	1	1	1
29	S70-3	Ball, top and bottom race $\frac{1}{4}$"	40	40	40	40	40	40

STEERING DAMPER

30	H536	Knob, c/w rod	1	1	1	1	1	1
31	H565	Washer, damper knob abutment	1	1	1	1	1	1
32	H408	Sleeve, damper adjusting	1	1	1	1	1	1
33	H409	Pin, sleeve securing	1	1	1	1	1	1
34	H413	Plate, damper anchor	1	1	1	1	1	1
35	F718	Bolt, damper anchor plate $1\frac{5}{16}$" U/H ...	1	1	1	1	1	1
36	SI-51	Nut, damper anchor plate	1	1	1	1	1	1
37	H435	Disc, damper anchor plate friction	1	1	1	1	1	1
38	H95	Spring, damper anchor plate	1	1	1	1	1	1

FRONT WHEEL—GROUP 13

REF. No.	PART No.	DESCRIPTION	5T	6T	TR5	T100	T110	TR6
1	W1333	Wheel, front, complete	1	1	1	—	—	—
2	W1323	Wheel, front, complete	—	—	—	1	1	1
3	W1229	Rim, spokes and hub, assembly	1	1	1	—	—	—
4	W1324	Rim, spokes and hub, assembly	—	—	—	1	1	1
5	W1230	Rim, front wheel, WM2-19	1	1	1	1	1	1
6	*W1236	Spoke, straight, 8/10G × 6"	40	40	40	—	—	—
7	*W1328	Spoke, straight, 8/10G × 5⅝"	—	—	—	40	40	40
8	S79-2	Nipple spoke	40	40	40	40	40	40
9	W1231	Hub and brake drum	1	1	1	—	—	—
10	W1325	Hub and brake drum	—	—	—	1	1	1
11	W1239	Spindle, front wheel	1	1	1	1	1	1
12	W635	Bearing, front wheel	2	2	2	2	2	2
13	W1237	Dust cover, L.H. bearing	1	1	1	1	1	1
14	T280	Circlip, L.H. bearing	1	1	1	1	1	1
15	W1238	Backing ring, R.H. bearing	1	1	1	1	1	1
16	W582	Retaining ring, R.H. bearing	1	1	1	1	1	1
17	W1334	Cover plate, L.H. hub	1	1	1	—	—	—
18	W1332	Cover plate, L.H. hub	—	—	—	1	1	1
19	W1197	Weight, wheel balance, ½ oz.	As required.					
20	W1198	Weight, wheel balance, 1 oz.						

* Supplied complete with Nipple S79-2.

FRONT BRAKE

21	W1301	Plate, front brake anchor	1	1	1	—	—	—
22	W1330	Plate, front brake anchor	—	—	—	1	1	1
23	W1302	Pin, shoe fulcrum	1	1	1	1	1	1
24	S25-2	Washer, fulcrum pin nut	1	1	1	1	1	1
25	E1435	Domed nut, fulcrum pin	1	1	1	1	1	1
26	W93	Shoe, brake c/w lining	2	2	2	—	—	—
27	W1337	Shoe, brake c/w lining, leading	—	—	—	1	1	1
28	W1338	Shoe, brake c/w lining, trailing	—	—	—	1	1	1
29	NW243	Lining, shoe brake	2	2	2	—	—	—
30	W1336	Lining, brake shoe	—	—	—	2	2	2
31	W129	Rivet, brake shoe lining	16	16	16	16	16	16
32	W135	Spring, brake shoe return	2	2	2	2	2	2
33	W1243	Cam, brake operating	1	1	1	1	1	1
34	W1298	Lever, brake cam	1	1	1	—	—	—
35	W1331	Lever, brake cam	—	—	—	1	1	1
36	S1-52	Nut, brake cam lever	1	1	1	1	1	1
37	S25-6	Washer, brake cam lever	1	1	1	1	1	1
38	W592	Spring, brake cam lever return	1	1	1	1	1	1
39	WF32	Pin, brake cam lever pivot	1	1	1	1	1	1
40		1/16" × ½" Split pin, pivot pin	1	1	1	1	1	1
41	W1246	Nut, anchor plate to spindle	1	1	1	1	1	1

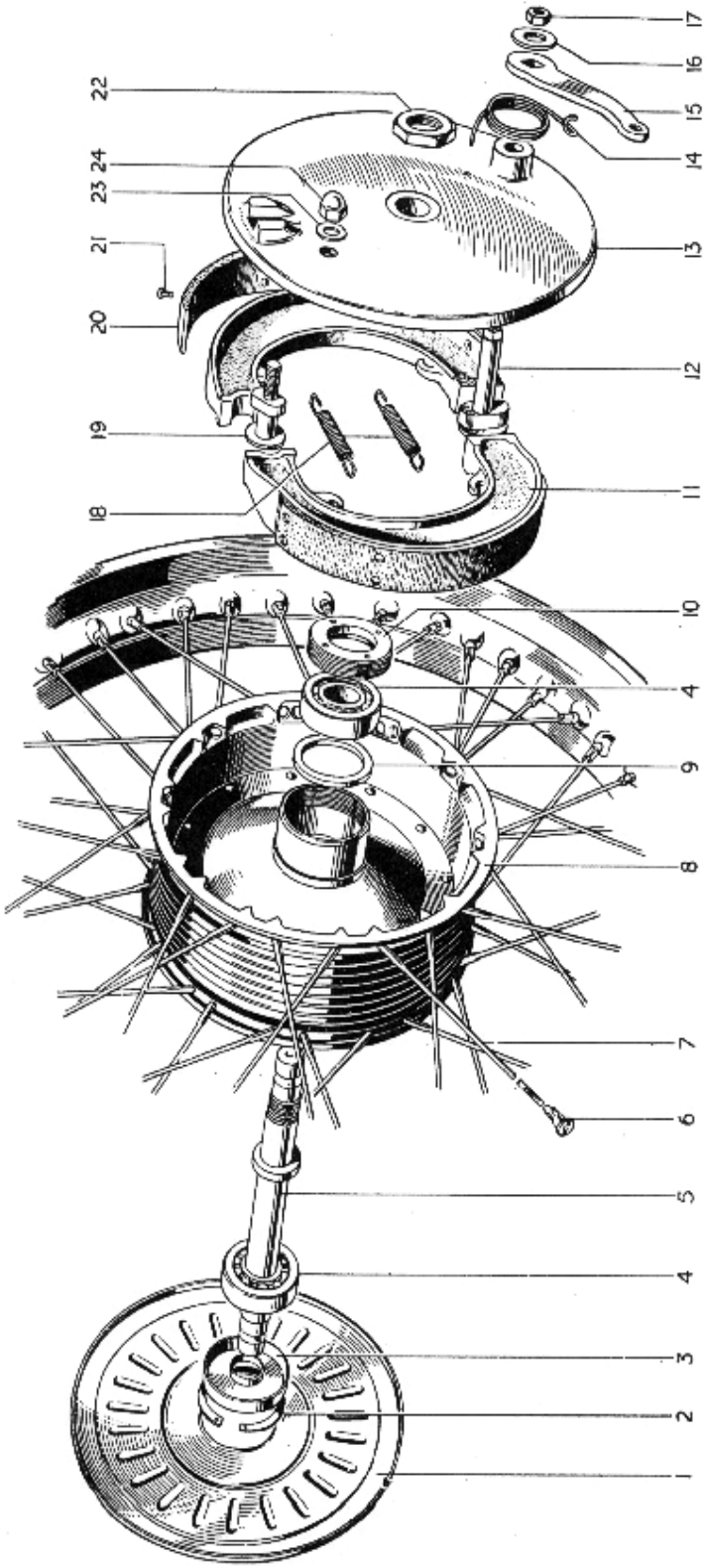

FIG. 17. FRONT WHEEL *for* SPEED TWIN (5T), THUNDERBIRD (6T), TROPHY (TR5).

INDEX FIG. 17

Illust. No.	*Part No.*	*Page No.*	*Ref. No.*
1	W1334	59	17
2	T280	59	14
3	W1237	59	13
4	W653	59	12
5	W1239	59	11
6	S79-2	59	8
7	W1236	59	6
8	W1231	59	9
9	W1238	59	15
10	W582	59	16
11	W93	59	26
12	W1243	59	33
13	W1301	59	21
14	W592	59	38
15	W1298	59	34
16	S25-6	59	37
17	S1-52	59	36
18	W135	59	32
19	W1302	59	23
20	NW243	59	29
21	W129	59	31
22	W1246	59	41
23	S25-2	59	24
24	E1435	59	25

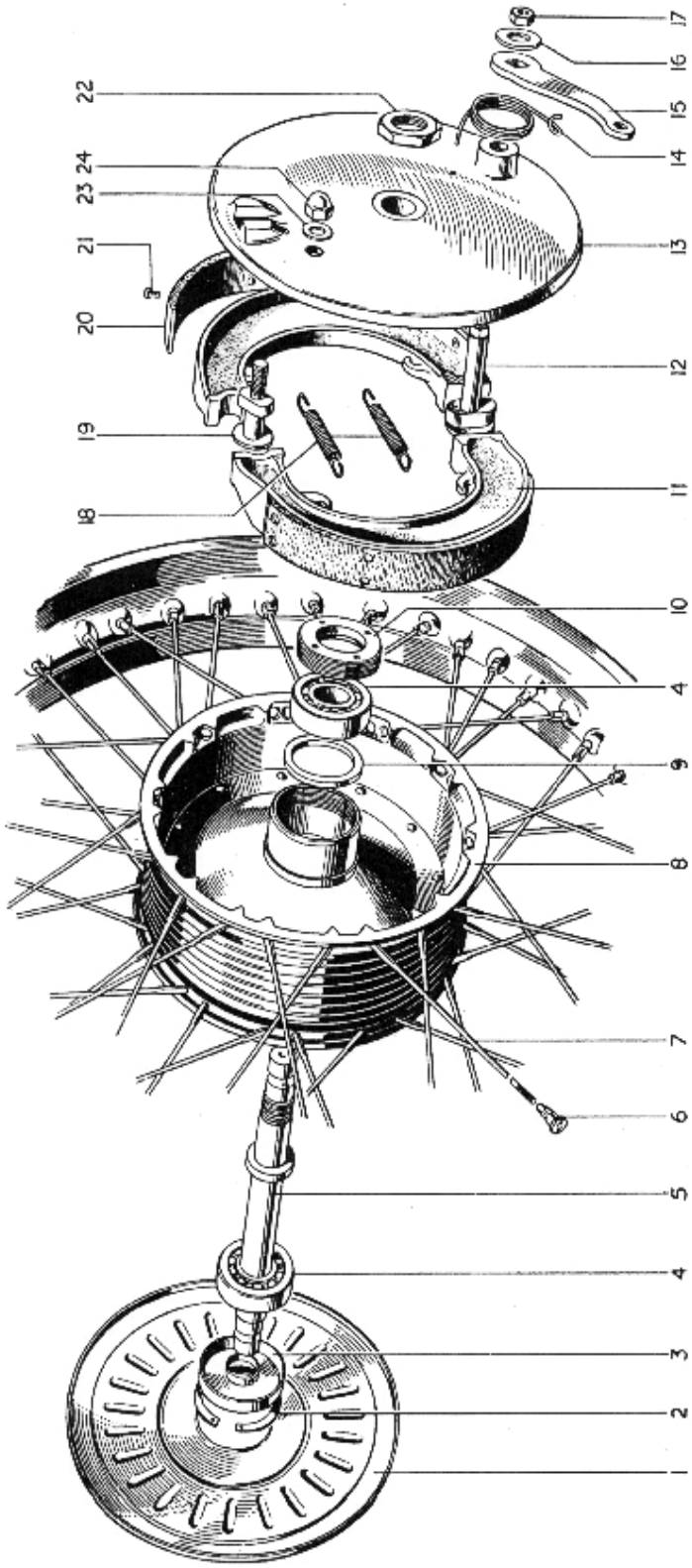

FIG. 18. FRONT WHEEL—TIGER 100 (T100), TIGER 110 (T110) AND TROPHY (TR6)

INDEX FIG. 18

Illust. No.	*Part No.*	*Page No.*	*Ref. No.*
1	W1332	59	18
2	T280	59	14
3	W1237	59	13
4	W653	59	12
5	W1239	59	11
6	S79-2	59	8
7	W1328	59	7
8	W1325	59	10
9	W1238	59	15
10	W582	59	16
11	W1337	59	27
	W1338	59	28
12	W1243	59	33
13	W1330	59	22
14	W592	59	38
15	W1331	59	35
16	S25-6	59	37
17	S1-52	59	36
18	W135	59	32
19	W1302	59	23
20	W1336	59	29
21	W129	59	31
22	W1246	59	41
23	S25-2	59	24
24	E1435	59	25

REAR WHEEL—GROUP 14

REF. No.	PART No.	DESCRIPTION	5T	6T	TR5	T100	T110	TR6
1	W.1305	Wheel, rear complete	1	1	—	1	1	—
2	W.1307	Wheel, rear complete	—	—	1	—	—	1
3	W.1306	Rim, spokes and hub assembly	1	1	—	1	1	—
4	W.1308	Rim, spokes and hub assembly	—	—	1	—	—	1
5	W.79A	Rim, rear wheel WM.2-19	1	1	—	1	1	—
6	W.1007	Rim, rear wheel WM.3-18	—	—	1	—	—	1
7	*W.1104	Spoke, L.H. 8/10G × 8" 90°	20	20	—	20	20	—
8	*W.1106	Spoke, R.H. 8/10G × 8⅜" 90°	20	20	—	20	20	—
9	*W.1107	Spoke, L.H. 8/10G × 7 9/16" 90°	—	—	20	—	—	20
10	*W.1108	Spoke, R.H. 8/10G × 7⅞" 90°	—	—	20	—	—	20
11	S.79-2	Nipple, spoke	40	40	40	40	40	40
12	W.1158	Hub	1	1	1	1	1	1
13	W951	Sprocket, and drum (46T)	1	1	1	1	1	1
14	W62	Bolt, sprocket and drum to hub 11/16" U/H ...	8	8	8	8	8	8
15	SI-51	Nut, sprocket and drum to hub	8	8	8	8	8	8
16	W63	Lockplate, sprocket and drum nut	8	8	8	8	8	8
17	W1025	Spindle, rear wheel	1	1	1	1	1	1
18	F1747	Nut, rear wheel spindle	2	2	2	2	2	2
19	W653	Bearing, rear wheel ball	2	2	2	2	2	2
20	W1022	Ring, bearing backing L.H.	1	1	1	1	1	1
21	W1023	Distance, tube, bearing	1	1	1	1	1	1
22	W1021	Retaining ring, bearing	1	1	1	1	1	1
23	W1079	Locking screw, bearing retaining ring 5/16" U/H	1	1	1	1	1	1
24	W1024	Distance piece, L.H. bearing	1	1	1	1	1	1
25	W583	Cap, bearing dust R.H.	1	1	1	1	1	1
26	W1026	Nut, bearing retaining R.H.	1	1	1	1	1	1
27	W1134	Chain adjuster, rear wheel	2	2	2	2	2	2
28	W1015	End plate, adjuster	2	2	2	2	2	2
29	W1058	Nut, adjuster end plate	2	2	2	2	2	2
30	D106	Bolt, tyre security	1	1	—	1	1	—
31	WM3	Bolt, tyre security	—	—	2	—	—	2

** Supplied complete with nipple.*

REAR WHEEL BRAKE

32	W1112	Plate, rear brake anchor	1	1	1	1	1	1
33	F1747	Locknut, rear brake anchor plate	1	1	1	1	1	1
34	W93	Shoe assembly, rear with lining	2	2	2	2	2	2
35	NW243	Lining, rear brake shoe	2	2	2	2	2	2
36	W129	Rivet, brake shoe lining	16	16	16	16	16	16
37	W135	Spring, brake shoe return	2	2	2	2	2	2
38	W1083	Cam assembly rear brake	1	1	1	1	1	1
39	W1085	Lever, rear brake cam	1	1	1	1	1	1
40	SI-52	Nut, rear brake cam lever	1	1	1	1	1	1
41	W1090	Spring, rear brake cam lever return	1	1	1	1	1	1
42	DS47	Nut, Torque stay securing	1	1	1	1	1	1
43	PCW73A	Washer, torque stay nut	1	1	1	1	1	1