REPLACEMENT PARTS CATALOGUE

FOR

1973 MODELS

30CU.IN.[500c.c.]

TROPHY TRAIL TR 5T

U.S.A. EDITION

PART NO. 99-0973

REPLACEMENT PARTS CATALOGUE

FOR 1973

TROPHY TRAIL TR5T

TRIUMPH ENGINEERING COMPANY LIMITED
MERIDEN WORKS · ALLESLEY · COVENTRY CV5 9AU · ENGLAND
TELEPHONE COVENTRY (0203) 20221
MERIDEN 331
TELEGRAMS "TRUSTY" COVENTRY
TELEX "TRUSTY" 31305

SECOND EDITION DECEMBER 1972

INTRODUCTION

The Triumph Engineering Co. Ltd. point out that the information in this catalog was complete and correct at the time of printing. Distributors will be informed of any subsequent alterations.

GUARANTEE

Please refer to your local dealer or distributor for the latest terms of guarantee.

EASTERN U.S.A. DISTRIBUTOR:

Triumph Motorcycle Corporation,
P.O. Box 6790,
Towson,
Baltimore 4,
Maryland 21204.

Telex—Tricor Balt. 87728
Telephone—301-252-1700

WESTERN U.S.A. DISTRIBUTOR:

Triumph Motorcycle Corporation,
P.O. Box 2765,
East Huntington Drive,
Duarte,
California 91010.

Telex—Tricor Duarte 675469
Telephone—213-359-3221
213-681-0255

ENGINE AND FRAME NUMBERS

The engine number is located on the left side of the engine, immediately below the cylinder barrel to crankcase flange.

The frame number is located on the left side of the frame headlug, beneath the fork top lug and forward of the gasoline tank.

Both the engine and frame number should be quoted in full in any correspondence relating to the machine.

©
Copyright

All rights reserved. No part of this publication may be reproduced without permission.

INDEX

	Page
AIR FILTER	13
ALTERNATOR	7, 27
AUTO-ADVANCE UNIT	19
BATTERY CARRIER	33
BRAKE SWITCH	29
BREATHER PIPES	35
CAMSHAFT, INLET AND EXHAUST	7
CAPACITOR, IGNITION	55
CAPACITOR PACK	55
CARBURETOR	13
CENTRE STAND	35
CHAINS	27
CHAINCASE	27
CLUTCH	25
CLUTCH LEVER ASSEMBLY	49
COIL	55
CONNECTING RODS	7
CONTACT BREAKER	19
CONTROL CABLES	51
CONTROL LEVERS	49
CRANKCASE	9
CRANKCASE UNDERSHIELD	29, 31
CRANKSHAFT	7
CYLINDERS	15, 17
CYLINDER HEAD	15, 17
ENGINE PLATES	29, 31
ENGINE TORQUE STAY	29, 31
EXHAUST PIPES	33
EXHAUST PIPE ADAPTOR	33
FENDERS	47
FLASHERS	57
FOOTRESTS	29, 31
FRAME	35
FRONT FORKS	39
FRONT WHEEL	43
GAS TANK	53
GASKET SET	5
GEARBOX	21
HANDLEBARS	49
HANDLEBAR MOUNTINGS	41
HEADLAMP	57
HORN	55
KICKSTARTER	23
MANIFOLD	13
MUFFLER	33
OIL PUMP	11
OIL PIPES	35
PISTONS	7
PROP STAND	37
PUSH RODS	15, 17
REAR WHEEL	45
RECTIFIER	55
REFLECTORS	53
ROCKERS	15, 17
SEAT	53
SIDE PANEL	33
SPARK PLUG	55
SPEEDOMETER	59
SPEEDOMETER GEARBOX	45
SUSPENSION UNITS	37
SWINGING ARM	37
SWITCHES	49
TABLE OF STANDARD HARDWARE	62
TACHOMETER	59
TACHOMETER GEARBOX	59
TAIL LAMP	57
TAPPETS	15, 17
TIMING GEARS	7
TOOL KIT	61
VALVES	15, 17
VALVE GUIDES	15, 17
WIRING HARNESS	55
ZENER DIODE	55

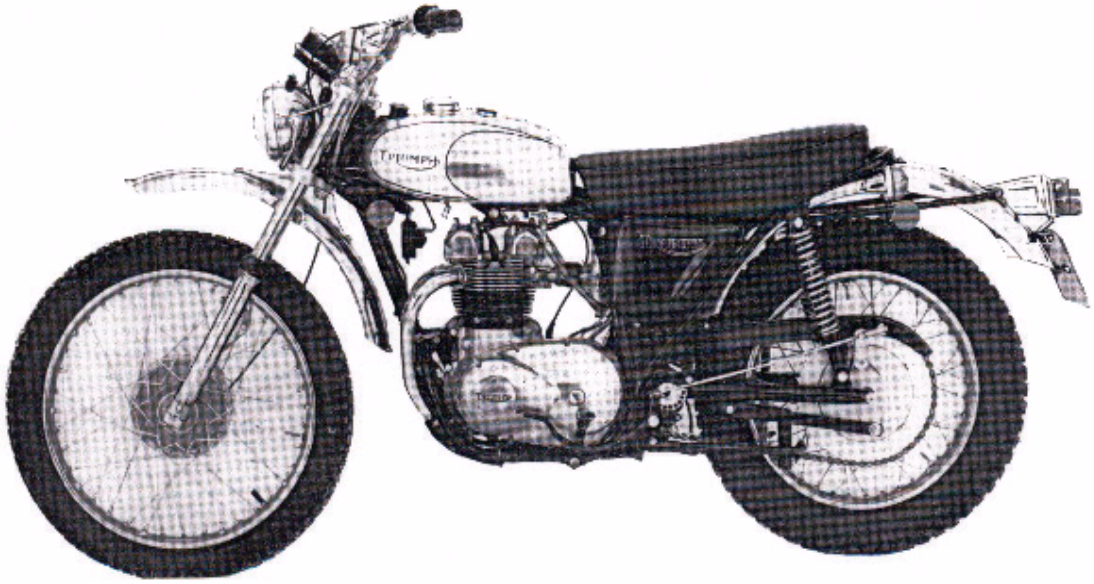

TECHNICAL DATA

Bore and Stroke		2.716 x 2.578 ins. (70 x 67 m.m.)
Capacity		30 cu. ins. (500 c.c.)
Compression Ratio		9 : 1
Spark Plugs		Champion N4
Carburetor		Amal Concentric type R928
	Main Jet	.180
	Needle Jet	.106
	Needle	Standard
	Throttle Valve	No. 3
Gearbox Sprocket		18 teeth
Chains	Front	$\frac{3}{8}$ in. Duplex x 78 links
	Rear	$\frac{5}{8}$ in. x $\frac{3}{8}$ in. x 110 links
Capacities	Gas Tank	$2\frac{1}{4}$ U.S. Galls.
	Oil Tank	6 U.S. pints
	Gearbox	$\frac{2}{3}$ pint (375 c.c.)
	Primary Chaincase (Initial fill)	$\frac{1}{4}$ pint (150 c.c.)
	Front Forks (each leg)	$\frac{1}{3}$ pint (200 c.c.)
Brakes	Front, diameter	8 in. (20.32 cm.)
	Rear, diameter	7 in. (17.18 cm.)
Tire Size	Front	3.00 x 21
	Rear	4.00 x 18
Gasket Sets	Decoke	99-3020
	Overhaul	99-3021

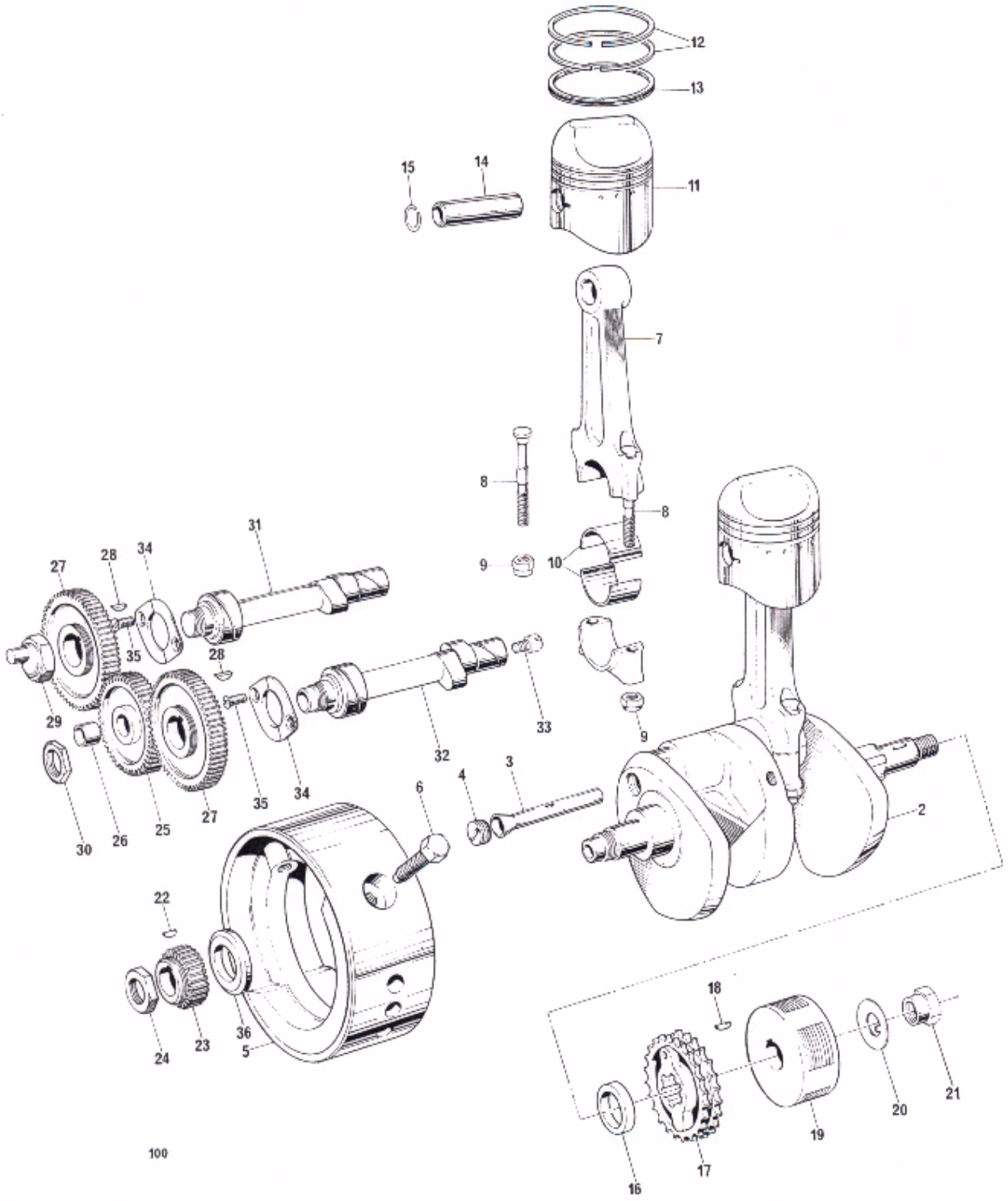

Fig. 1. CRANKSHAFT AND CONNECTING RODS

Ref. No.	Part No.	DESCRIPTION	QUANTITY	REMARKS

CRANKSHAFT AND CONNECTING RODS

1	70–9489	CRANKSHAFT AND FLYWHEEL ASSEMBLY	1	
2	70–9490	Crankshaft	1	
3	70–3999	Oil tube	1	
4	70–9492	Screwed plug	1	
5	70–5870	Flywheel	1	
6	*21–1913	Flywheel bolt ($1\frac{15}{32}$ in. U.H.)	3	
7	70–9915	CONNECTING ROD	2	
8	70–9914	Connecting rod bolt	2	
9	60–3761	Self-locking nut	2	
10	70–3706	Big end bearing (available in —.010 and —.020 undersizes	4	
11	70–6884	PISTON COMPLETE C.R.9.1	2	
12	70–6893	Taper compression ring	4	
13	70–6894	Oil control ring	2	
14	70–6861	Gudgeon pin	2	
15	70–6869	Circlip	4	
16	71–2664	Spacer	1	
17	70–3734	Engine sprocket, 26T Duplex	1	
18	70–3851	Rotor key	1	
19	54213901	Rotor (99-0739)	1	
20	70–3975	Tab washer	1	
21	21–1915	Nut	1	
22	70–1580	Key	1	
23	70–1771	Timing pinion	1	
24	21–1914	Nut	1	
25	70–6160	INTERMEDIATE WHEEL	1	
26	70–0400	Bush	1	
27	71–2717	Camshaft pinion	2	
28	70–1558	Camshaft key	2	
29	71–1007	Inlet camshaft nut	1	
30	70–6523	Exhaust camshaft nut	1	
31	71–1064	Inlet camshaft	1	
32	70–9983	EXHAUST CAMSHAFT	1	
33	70–9988	Tachometer drive plug	1	
34	70–9502	Retaining plate	2	
35	21–1929	Screw ($\frac{15}{32}$ in. U.H.)	4	
36	70–9503	Clamping washer	1	
Not illus.	70–8038	Shim (0.010")	As required	up to 4
Not illus.	71–2660	Shim (0.030")	As required	up to 4

* Use 60–0524 Loctite sealant.

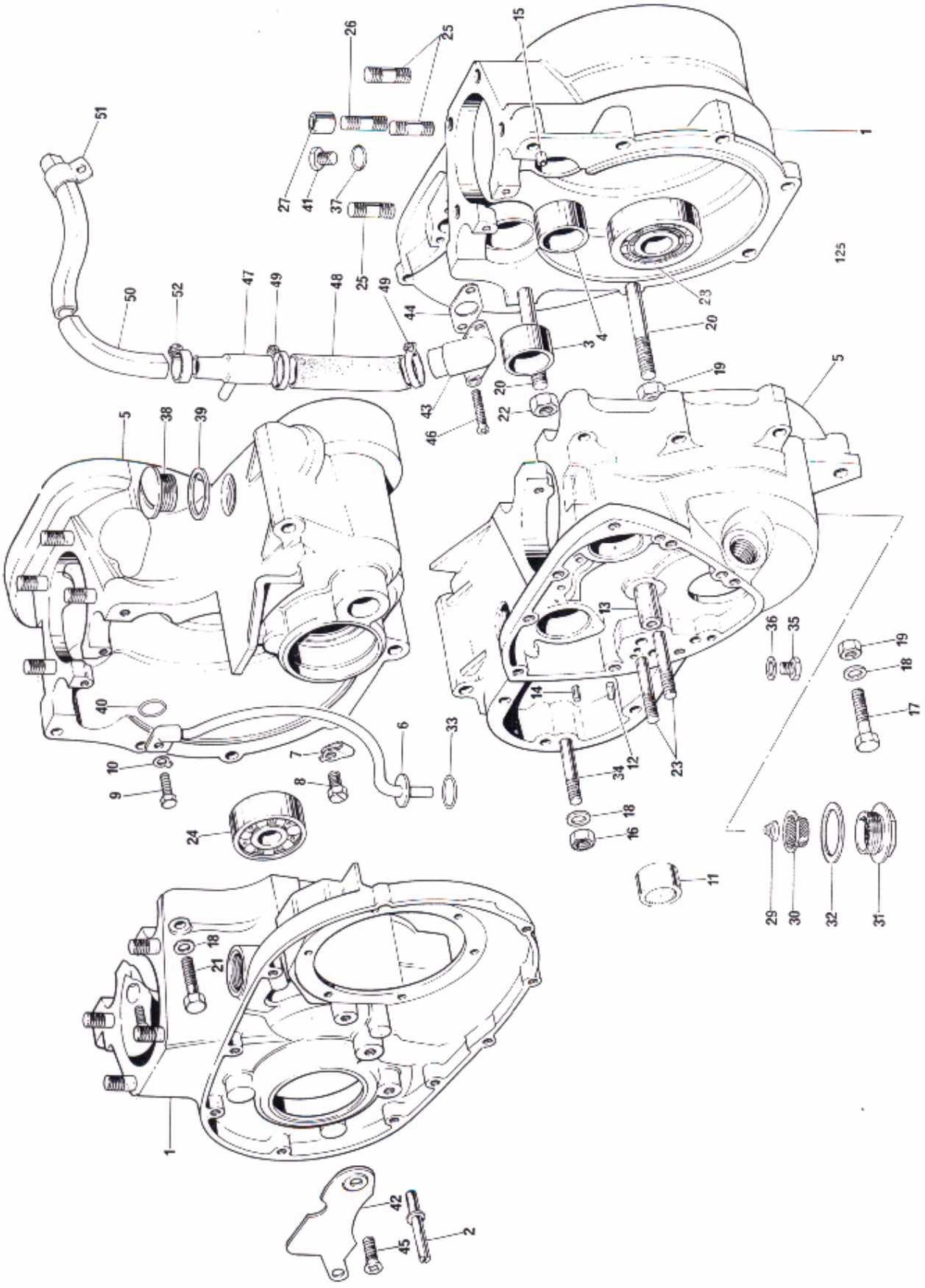

Fig. 2. CRANKCASE

Ref. No.	Part No.	DESCRIPTION	QUANTITY	REMARKS

CRANKCASE

1	71–1268	CRANKCASE DRIVE SIDE	1	
2	70–4147	Pivot pin	1	
3	70–3823	Camshaft bush	1	
4	70–3823	Camshaft bush	1	
5	71–1269	CRANKCASE TIMING SIDE	1	
6	70–9496	Oil scavenge pipe	1	
7	70–1509	Clip	1	
8	21–1920	Screw	1	
9	14–6102	Bolt	1	
10	70–7430	Tab washer	1	
11	57–1606	Needle roller bearing	1	
12	70–6386	Dowel at junction block	Ref. only	
13	70–0375	Idler gear spindle	1	
14	57–0912	Peg (at thrust washer)	1	
15	70–3716	Hollow dowel	2	
16	14–0302	Nut	1	
17	14–0225	Bolt	1	
18	60–4247	Plain washer	5	
19	14–1302	Nut	2	
20	21–1925	Stud (3¾ in. U.H.)	2	
21	21–1919	Bolt	1	
22	21–1852	Nut	1	
23	21–1864	Oil pump stud (1 5/16 in. O.A.)	2	
24	70–9494	Right main bearing (ball journal)	1	
25	21–1921	Cylinder base stud (1½ in. O.A.)	6	
26	21–1922	Cylinder base stud (1 11/16 in. O.A.)	2	
27	70–8751	Dowel	2	
28	70–9493	Left main bearing (roller journal)	1	
29	70–3724	Filter spring	1	
30	70–3722	Filter	1	
31	70–9501	Filter cap	1	
32	70–1577	Joint washer	2	
33	70–3723	Sealing washer	1	
34	21–1927	Stud (3 1/16 in. O.A.)	2	
35	21–1872	Drain plug	1	
36	57–1257	Joint washer	1	
37	70–8896	Fibre washer	1	
38	57–2166	Filler plug	1	
39	70–8782	Joint washer	1	
40	70–7431	"O" ring	1	
41	21–1872	Plug	1	
42	71–1079	Cover plate	1	
43	70–9335	Outlet stub-breather	1	
44	71–1460	Joint washer	1	
45	71–1077	Screw	2	
46	71–1075	Screw	1	
47	83–1610	Tee piece	1	
48	83–4550	Pipe, breather to tee piece	1	
49	60–2253	Clip	2	
Not illus.	70–4707	Grommet, alternator leads	1	
50	83–4813	Crankcase breather pipe-rear	1	
51	83–5140	Clip	1	
52	60–2252	Clip, pipe to tee piece	1	

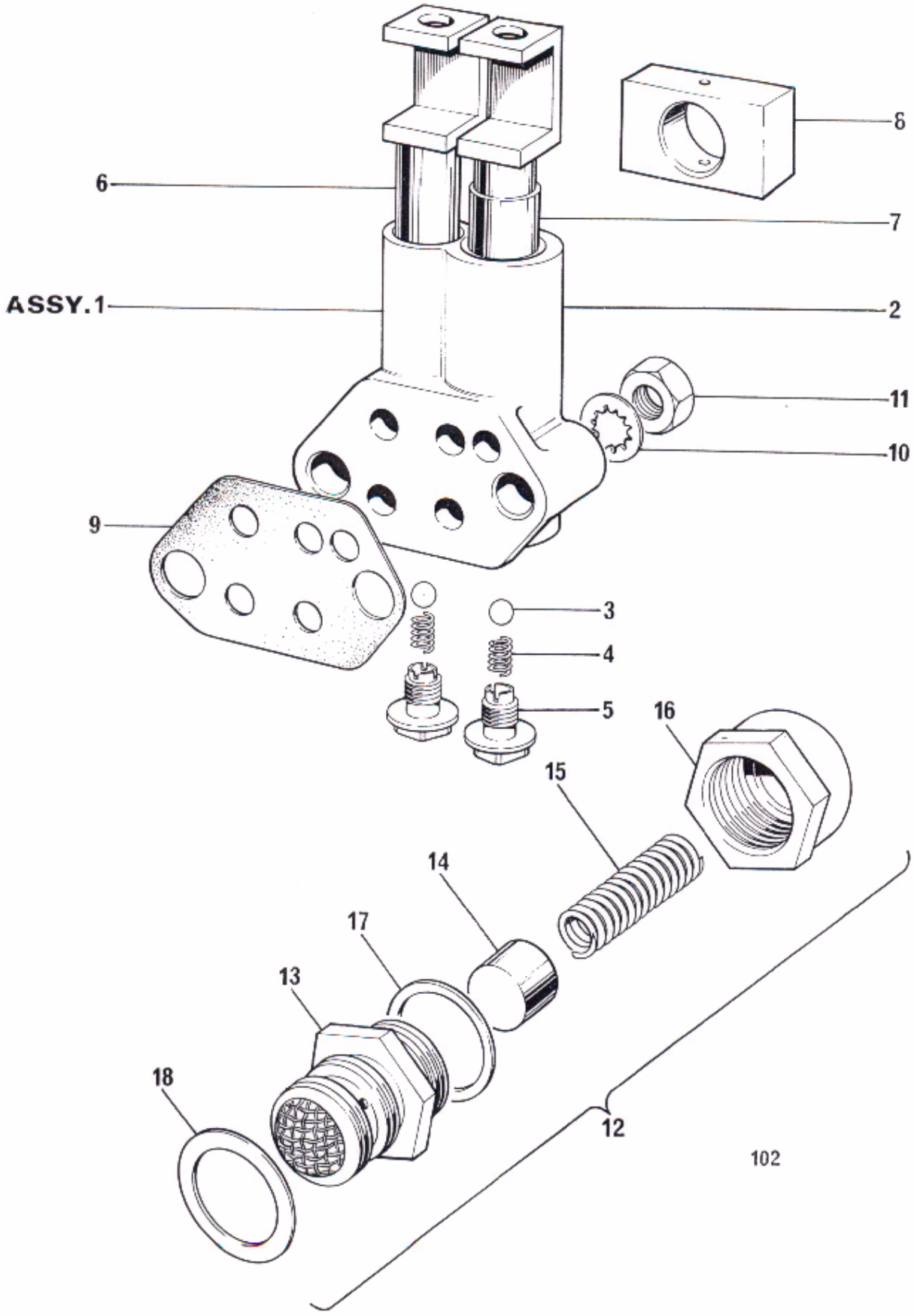

Fig. 3. OIL PUMP AND RELEASE VALVE

Ref. No.	Part No.	DESCRIPTION	QUANTITY	REMARKS

OIL PUMP AND RELEASE VALVE

1	70–6928	OIL PUMP	1	
2	70–6680	Pump body...	Reference only	
3	60–2363	Valve ball	2	
4	70–0403	Valve spring	2	
5	70–2360	Screwed plug	2	
6	71–3422	Feed plunger	1	
7	70–6681	Scavenge plunger	1	
8	70–0495	Drive block	1	
9	71–1461	Joint washer	1	
10	70–3887	Serrated washer	2	
11	21–1906	Nut	2	
12	71–3447	Oil pressure release valve	1	
13	70–7590	Body	Reference only	
14	70–8752	Piston	1	
15	70–7591	Spring	1	
16	70–6596	Cap	1	
17	70–8754	Joint washer (cap to body)	1	
18	70–1670	Joint washer	1	

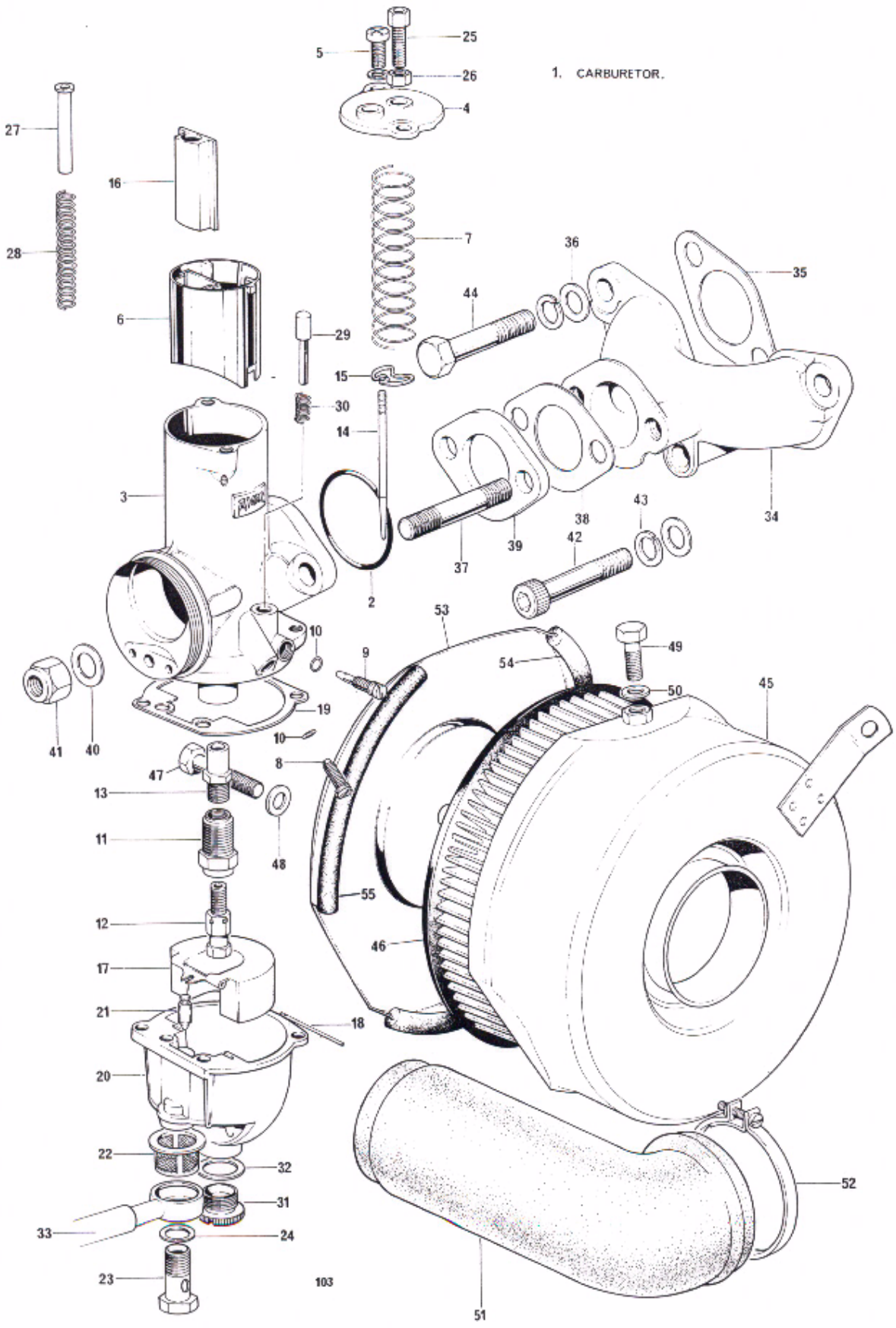

Fig. 4. CARBURETOR

CARBURETOR

Ref. No.	Part No.	DESCRIPTION	QUANTITY	REMARKS
1	60–4189	CARBURETOR R928/21	1	
2	622/101	"O" ring seal (99-0522)	1	
3	R626/005	Mixing chamber R626/005	Reference only	
4	622/097	Mixing chamber top (99-1049)	4	
5	622/086	Screw (99-0521)	1	
6	622/060	Throttle valve (3 cutaway) (99-1125)	1	
7	622/065	Throttle return spring (copper plated) (99-0509)	1	
8	622/077	Throttle stop screw (99-0516)	1	
9	622/076	Air adjusting screw (99-0515)	2	
10	622/082	"O" ring (99-0520)	1	
11	622/128	Jet holder (99-1034)	1	
12	376/100	Main jet (99-0445) size 180	1	
13	622/122	Needle jet (99-1035) size .106	1	
14	622/124	Needle (99-1036)	1	
15	622/067	Needle clip (99-0510)	1	
16	622/134	Air valve guide sleeve (99-1051)	1	
17	622/069	Float (99-0512)	1	
18	622/071	Float spindle (99-0513)	1	
19	622/073	Joint washer (99-0514)	1	
20	622/055	Float chamber (99-1154)	1	
21	622/068	Float needle (99-0511)	1	
22	376/093	Filter (99-0438)	1	
23	622/078	Banjo bolt (99-0517)	1	
24	13/163	Fibre washer (99-1124)	1	
25	4/035	Cable adjuster	Reference only	
26	5/077	Nut (99-0224)	1	
27	622/062	Air slide	Reference only	
28	622/129	Air slide spring (99-1038)	1	
29	622/089	Tickler pin	Reference only	
30	14/032	Spring	Reference only	
31	622/147	Drain plug (99-1152)	1	
32	622/151	Washer (99-1153)	1	
33	82–9269	Petrol pipe	1	
34	71–3530	Inlet manifold	1	
35	70–6772	Joint washer	2	
36	60–4247	Plain washer	4	
37	21–0582	Stud ($1\frac{5}{16}$ in. O.A.)	2	
38	71–3573	Joint washer	1	
39	70–4918	Insulating block	1	
40	60–4247	Plain washer	2	
41	14–1302	Self-locking nut	2	
42	14–7024	Socket head screw (2 in. U.H.)	2	
43	21–0648	Spring washer	4	
44	14–6115	Bolt	2	
45	83–4105	Air filter	1	
46	60–2601	Element	1	
47	14–0203	Bolt — Element attachment	1	
48	60–4248	Washer — Element attachment	1	
49	14–0102	Bolt — Air filter top fixing	1	
50	60–2427	Washer — Air filter top fixing	1	
51	83–4450	Connector, air cleaner to carburetor	1	
52	60–3975	Clip	1	
53	83–5116	Cover	1	
54	83–5117	Sealing strip, long	1	
55	83–5118	Sealing strip, short	1	
Not illus.	82–5228	Rubber washer	1	

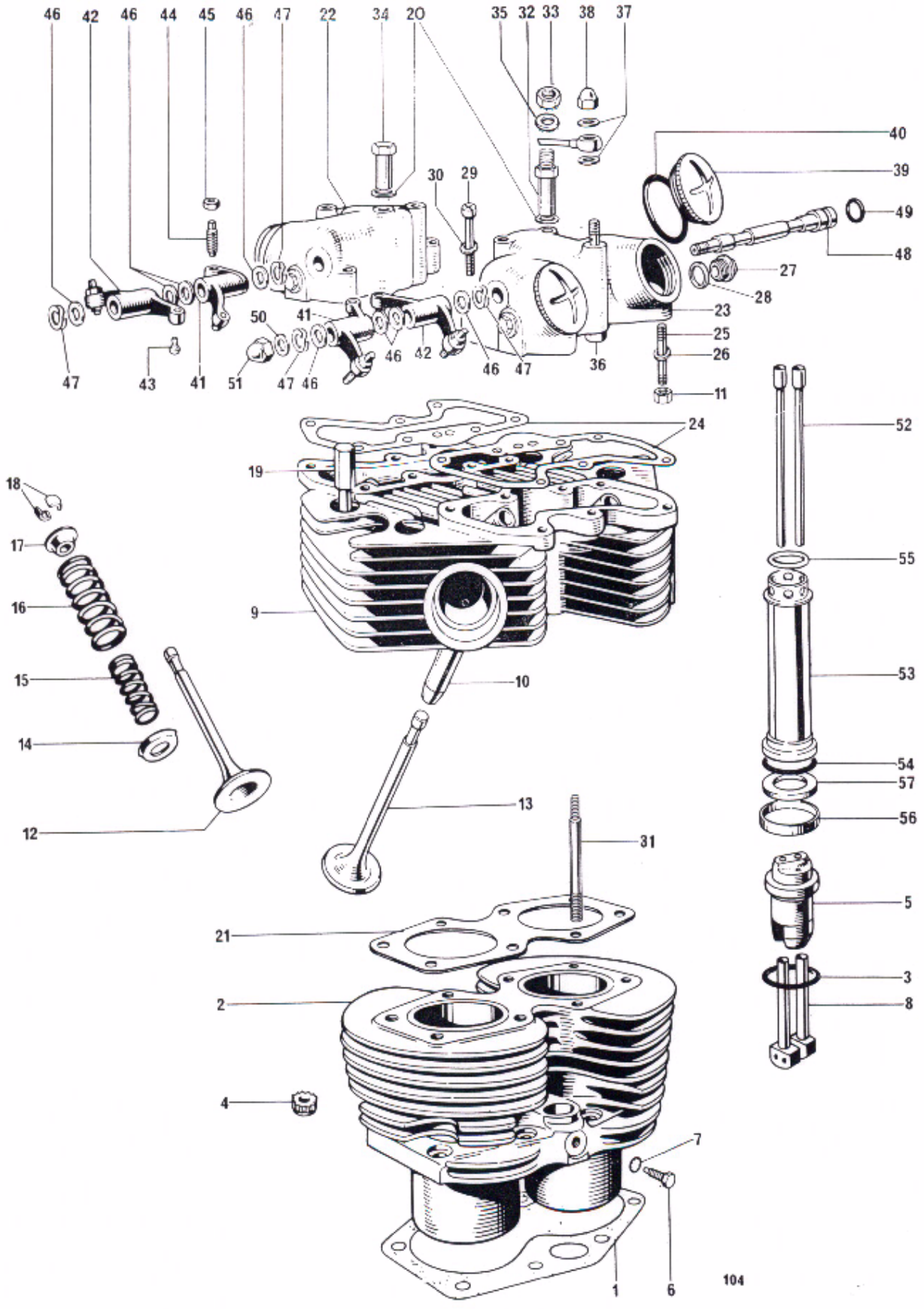

Fig. 5. CYLINDER BLOCK AND HEAD

CYLINDER BLOCK AND HEAD

Ref. No.	Part No.	DESCRIPTION	QUANTITY	REMARKS
1	70–3798	Cylinder base gasket	1	
2	70–9719	Cylinder block	1	
3	70–7563	"O" ring	2	
4	21–0692	Nut (12 point)	8	
5	70–9352	Tappet guide block	2	
6	97–0200	Tappet block screw ($\frac{7}{16}$ in. U.H.)	2	
7	70–1612	Serrated washer	2	
8	70–3753	Tappet	4	
9	71–0277	CYLINDER HEAD c/w GUIDES	1	
10	71–0229	Valve guide (cast iron)	4	
11	14–0301	Nut (line 25)	4	
12	70–6853	Inlet valve	2	
13	70–6854	Exhaust valve	2	
14	70–6855	Bottom Cup	4	
15	70–5946	Inner valve spring	4	
16	70–4011	Outer valve spring	4	
17	70–3742	Top collar	4	
18	99–0062	Split cotter	8	
19	70–4456	Cylinder head bolt (2 25/32 in. U.H.)	4	
20	82–2184	Plain washer	4	
21	70–4675	Cylinder head gasket	1	
22	71–3566	Inlet rocker box	1	
23	71–3567	Exhaust rocker box	1	
24	70–9511	Joint washer	2	
25	14–1401	Rocker box stud	4	
26	70–3302	Washer	4	
27	71–2079	Plug, rocker box	4	
28	57–2697	Joint washer	4	
29	14–6609	Screw ($\frac{15}{16}$ in. U.H.)	4	
30	70–3857	Plain washer	4	
31	71–3643	Cylinder head stud	4	
32	71–3645	Cylinder head torque stay nut	2	
33	14–0303	Nut, torque stay	2	
34	71–3644	Nut, clyinder head	2	
35	60–2323	Washer	4	
36	82–3809	Oil feed bolt	2	
37	82–1880	Copper washer	6	
38	97–0400	Domed nut	2	
39	70–4610	Inspection cap	4	
40	70–8782	"O" ring	4	
41	70–3749	ROCKER (right exhaust, left inlet)	2	
42	70–3750	ROCKER (left exhaust, right inlet)	2	
43	70–7651	Rocker ball pin	4	
44	70–3223	Rocker adjusting pin	4	
45	60–4264	Adjuster lock nut	4	
46	70–2534	Thrust washer, $\frac{7}{16}$ in.	8	
47	70–3224	Spring washer	4	
48	71–3301	Rocker spindle	2	
49	60–3548	Sealing rubber	2	
50	70–1335	Copper washer	2	
51	70–1435	Domed nut	2	
52	70–4008	Push rod	4	
53	71–2576	Cover tube	2	

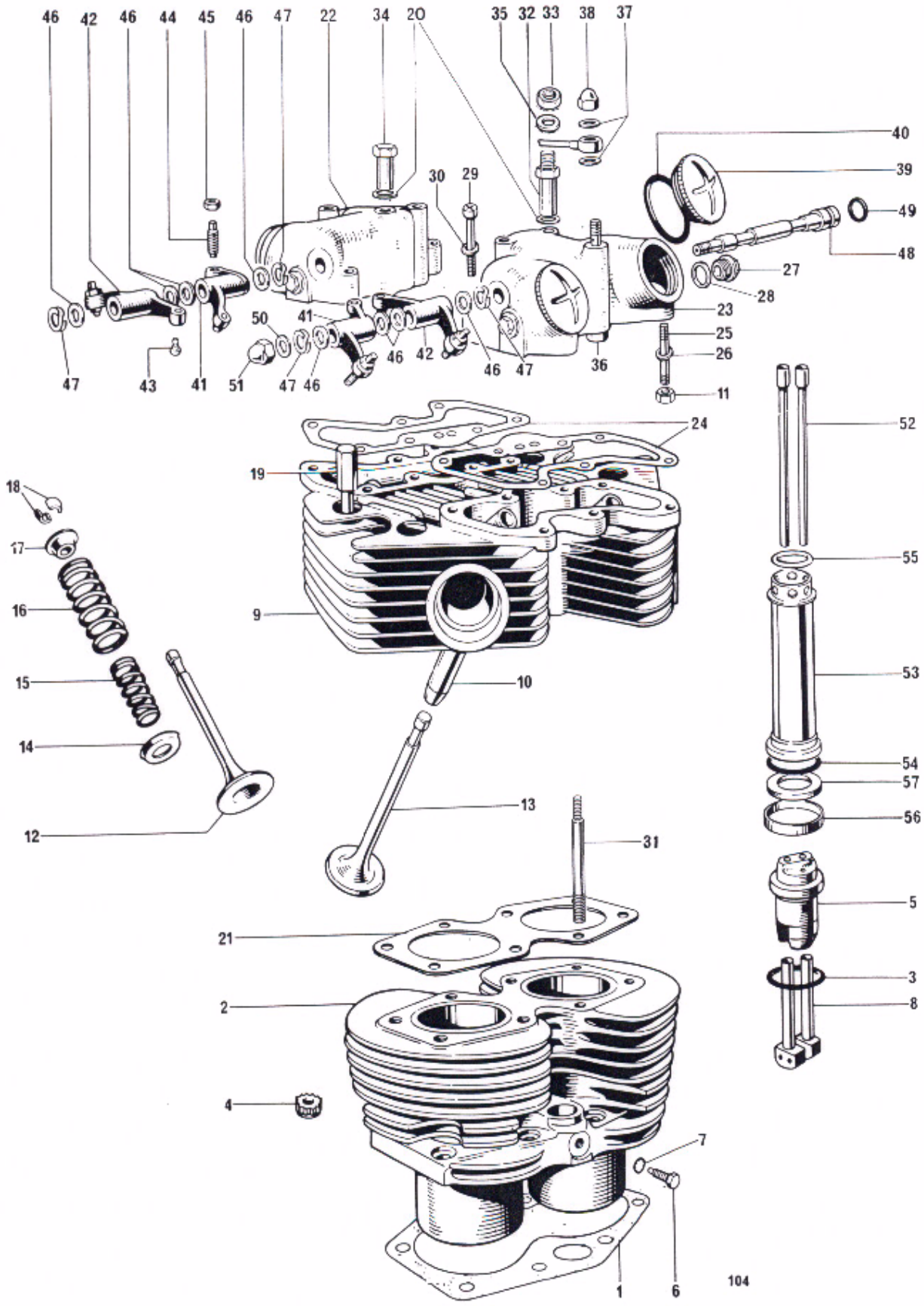

Fig. 5. CYLINDER BLOCK AND HEAD

Ref. No.	Part No.	DESCRIPTION	QUANTITY	REMARKS

CYLINDER BLOCK AND HEAD (*continued*)

54	70–7310	"O" ring, push rod cover tube (bottom)	2	
55	71–1283	"O" ring, push rod cover tube (top)	2	
56	71–1707	Sleeve, push rod cover tube	2	
57	70–3547	Joint washer, push rod cover tube	2	

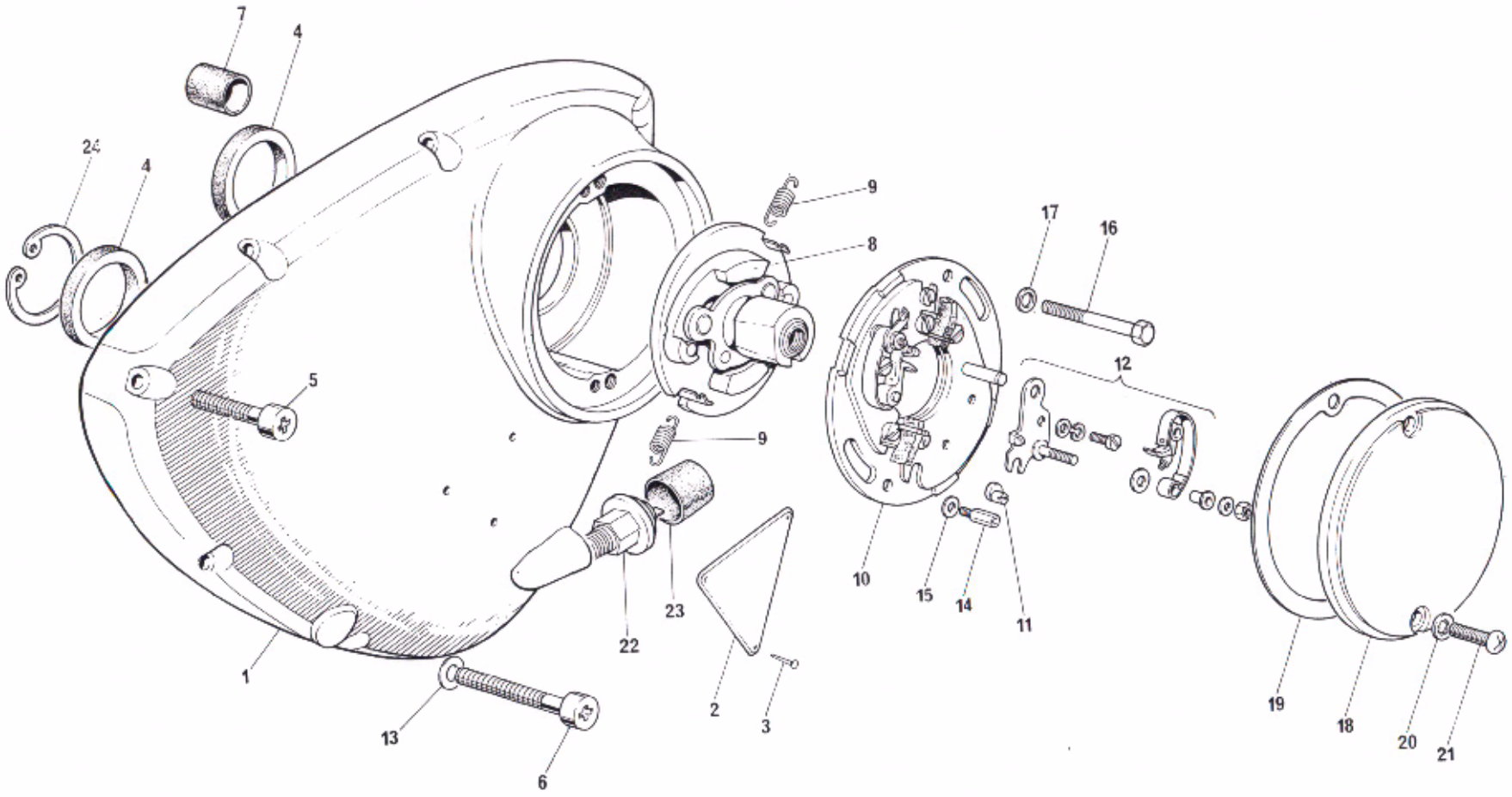

105

Fig. 7. TIMING COVER AND CONTACT BREAKER

Ref. No.	Part No.	DESCRIPTION	QUANTITY	REMARKS

TIMING COVER AND CONTACT BREAKER

1	70–9250	Timing cover	1	
2	70–4016	Patent plate	1	
3	60–2085	Hammer-drive screw	3	
4	70–4568	Oil seal	2	
5	14–6607	Screw ($\frac{7}{8}$ in. U.H.)	4	
6	21–1916	Screw ($1\frac{1}{8}$ in. U.H.)	4	
7	57–0989	Hollow dowel	1	
8	54419340	AUTO-ADVANCE UNIT (99-0771)	1	
9	54415642	Spring set (99-0757)	2	
10	54419097	CONTACT BREAKER PLATE ASSEMBLY (99-0768) ...	1	
11	54419220	Pin adjustment (99-0769)	2	
12	54419827	Contact set (99-0772)	2	
13	60–3963	Washer (cover screws)	8	
14	70–7680	Pillar bolt	2	
15	70–6559	Washer	2	
16	14–0208	Bolt	1	
17	70–8163	Washer	1	
18	70–8737	Cover	1	
19	71–1462	Joint washer	1	
20	60–4256	Serrated washer	2	
21	70–7354	Screw	2	
22	60–2133	Oil pressure switch	1	
23	60–2045	Cover pressure switch...	1	
24	70–4569	Circlip	1	
Not illus.	70–4849	Dowel pin, auto advance to camshaft	1	
Not illus.	60–2138	Timing label for C.B. cover	1	
Not illus.	70–9526	Blanking plug (to replace oil pressure switch)	Available	

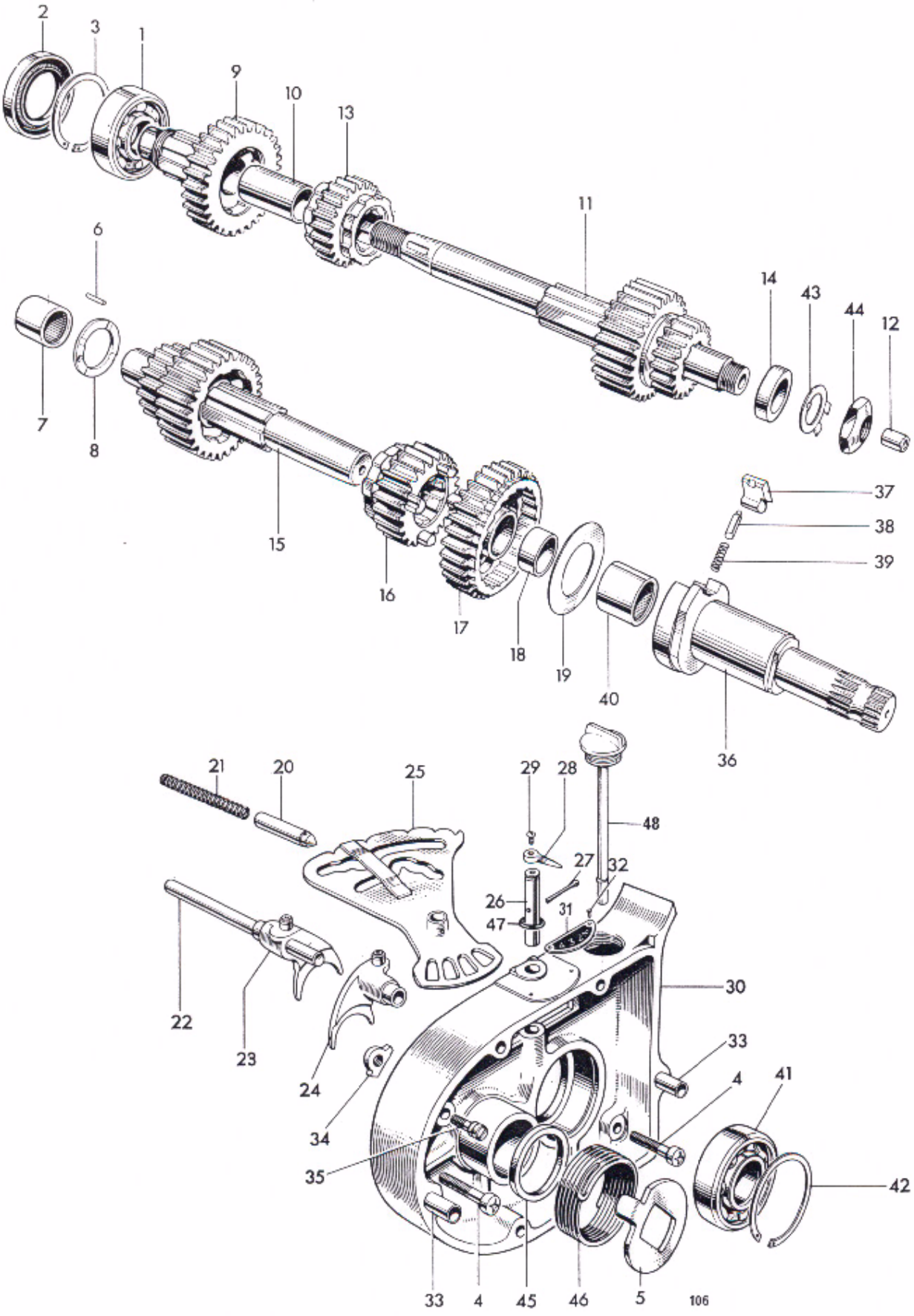

Fig. 7. GEARBOX SHAFTS, BEARINGS AND INNER COVER

Ref. No.	Part No.	DESCRIPTION	QUANTITY	REMARKS

GEARBOX SHAFTS, BEARINGS AND INNER COVER

1	57–0665	High gear bearing (ball journal)	1	
2	57–1478	Oil seal	1	
3	37–0680	Circlip	1	
4	14–6608	Screw	2	
5	57–1422	Return spring plate	1	
6	57–0912	Peg	1	
7	57–1606	Layshaft bearing	1	
8	57–1607	Thrust washer	1	
9	57–3991	MAINSHAFT HIGH GEAR (22T)	1	
10	57–1405	High gear bush	1	
11	57–4040	MAINSHAFT c/w THIRD AND LOW GEARS (15/24T)	1	
12	57–1391	Clutch rod bush	1	
13	57–4031	Mainshaft second gear (20T)	1	
14	57–1411	Mainshaft distance piece	1	
15	57–4041	Layshaft c/w second and high gears (15/24T)	1	
16	57–3997	Layshaft third gear (20T)	1	
17	57–4033	LAYSHAFT LOW GEAR (29T)	1	
18	57–1393	Low gear bush	1	
19	57–4007	Pawl retaining disc	1	
20	57–3660	Camplate index plunger	1	
21	57–3661	Index plunger spring	1	
22	57–1457	Selector fork spindle	1	
23	57–1480	Mainshaft selector fork	1	
24	57–1481	Layshaft selector fork	1	
25	57–4218	Gear selector camplate	1	
26	57–1418	Camplate spindle	1	
27	—	Split pin ($\frac{1}{8}$ in. x $\frac{3}{4}$ in.)	References only	
28	57–1416	Gear indicator pointer	1	
29	97–0688	Screw ($\frac{5}{16}$ in. U.H.)	1	
30	57–4614	Inner cover	1	
31	57–1417	Gear indicator plate	1	
32	60–4255	Indicator plate rivet	2	
33	57–1440	Hollow dowel	2	
34	57–1157	Kickstarter stop plate	1	
35	57–1390	Stop plate anchor screw	1	
36	57–1981	KICKSTARTER SPINDLE	1	
37	57–1431	Kickstarter pawl	1	
38	57–1282	Plunger	1	
39	57–1161	Plunger spring	1	
40	57–1897	Needle roller bearing	1	
41	57–1469	Mainshaft bearing (Ball journal)—metric	1	
42	57–4113	Circlip	1	
43	57–2240	Tab washer	1	
44	21–0594	Mainshaft nut	1	
45	57–1464	Distance piece	1	
46	57–1441	Kickstarter return spring	1	
47	70–4803	"O" ring	1	
48	57–4612	Dipstick	1	

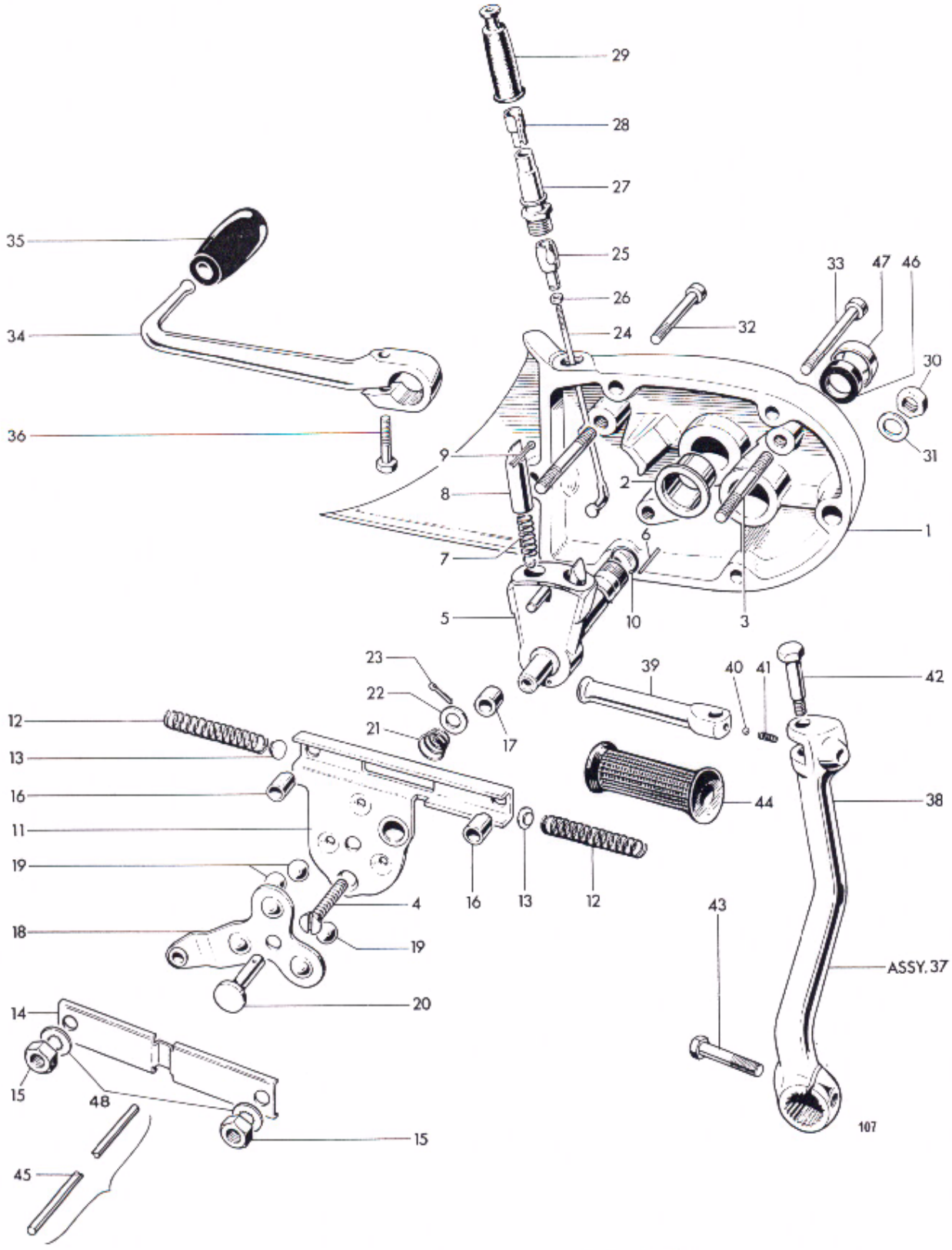

Fig. 8. GEARBOX OUTER COVER AND LEVERS

GEARBOX OUTER COVER AND LEVERS

Ref. No.	Part No.	DESCRIPTION	QUANTITY	REMARKS
1	57–3755	GEARBOX OUTER COVER	1	
2	57–1395	Gearchange spindle bush	1	
3	21–1928	Stud (1 5/16 in. O.A.)	2	
4	14–6505	Screw	1	
5	57–1942	GEARCHANGE QUADRANT	1	
6	57–1474	Spring retaining pin	2	
7	57–1436	Plunger spring	2	
8	57–1396	Selector plunger	2	
9	—	Split pin (5/64 in. x 3/4 in.)	References only	
10	57–2697	Sealing ring	1	
11	57–1871	Return spring housing	1	
12	57–1877	Return spring	2	
13	57–1878	Thrust button	2	
14	57–1977	Cover	1	
15	21–1877	Nut	2	
16	57–1876	Distance piece	2	
17	57–1874	Distance piece	1	
18	57–4439	Clutch lever	1	
19	60–2368	Ball, 3/8 in. diam.	3	
20	57–1710	Shaft	1	
21	57–1712	Spring	1	
22	57–3673	Plain washer	1	
23	—	Split pin (5/64 in. x 1/2 in.)	Reference only	
24	57–1945	Spoke	1	
25	57–1946	Connector	1	
26	57–1937	Nut	1	
27	57–3784	Abutment	1	
28	57–2062	Adaptor, short	As required	
28	57–2063	Adaptor, long (For cable with short outer)	As required	
29	57–1646	Rubber cover	1	
30	14–1302	Nut	2	
31	60–4247	Plain washer	2	
32	21–1918	Screw	2	
33	21–1917	Screw	2	
34	57–4561	Gearchange lever	1	
35	57–2450	Pedal rubber	1	
36	37–0932	Bolt (1 in. U.H.)	1	
37	57–4503	KICKSTARTER LEVER COMPLETE	1	
38	57–4498	Kickstarter crank	1	
39	57–1292	Kickstarter pedal	1	
40	60–2364	Steel ball (1/4 in. diam.)	1	
41	57–1167	Index spring	1	
42	21–0541	Pivot bolt	1	
43	21–0644	Clamp bolt (1 5/16 in. U.H.)	1	
44	57–2330	Pedal rubber	1	
45	57–1970	Clutch operating rod	1	
46	57–2239	Oil seal	1	
47	57–2238	Oil seal cover	1	
48	70–1612	Serrated washer	2	

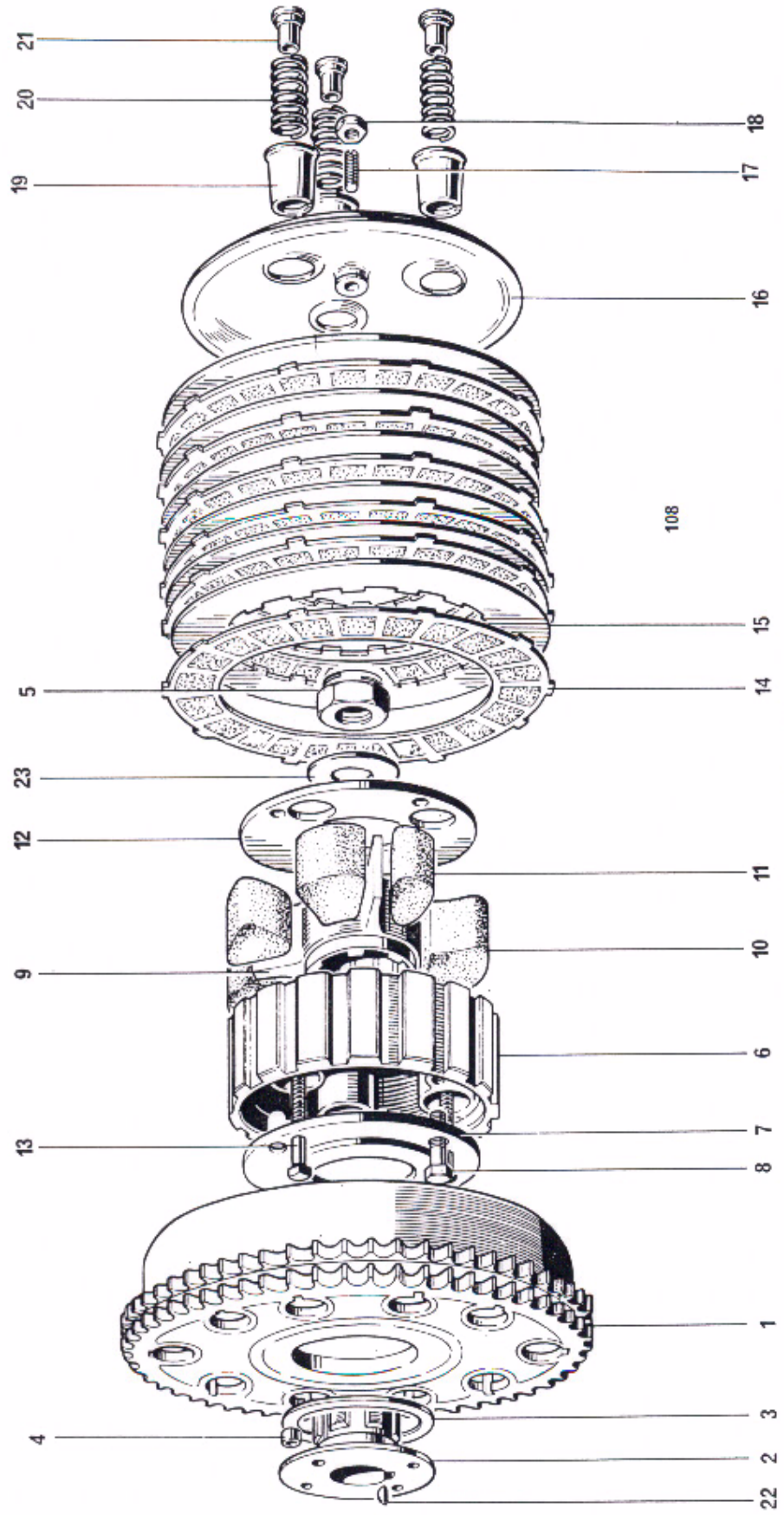

Fig. 9. CLUTCH

Ref. No.	Part No.	DESCRIPTION	QUANTITY	REMARKS

CLUTCH

1	57–1570	Sprocket and housing	1	
2	57–3930	Hub	1	
3	57–3931	Thrust washer	1	
4	57–0394	Roller	20	
5	21–0586	Nut	1	
6	57–4438	Centre (Shock absorber body)	1	
7	57–4436	Inner plate	1	
8	21–2157	Bolt	3	
9	57–4636	Shock absorber spider	1	
10	57–1722	Drive rubber (large)	3	
11	57–1723	Rebound rubber (small)	3	
12	57–4437	Outer plate	1	
13	57–423A	Screwed pin ($1\frac{27}{32}$ in. U.H.)	3	
14	57–1362	Driving plate (bonded)	6	
15	57–1363	Driven plate (plain)	6	
16	57–2156	Pressure plate	1	
17	57–2159	Adjuster pin	1	
18	14–0403	Nut	1	
19	57–1931	Spring cup	3	
20	57–1560	Spring	3	
21	57–2526	Nut	3	
22	60–4253	Key	1	
23	57–2279	Washer	1	

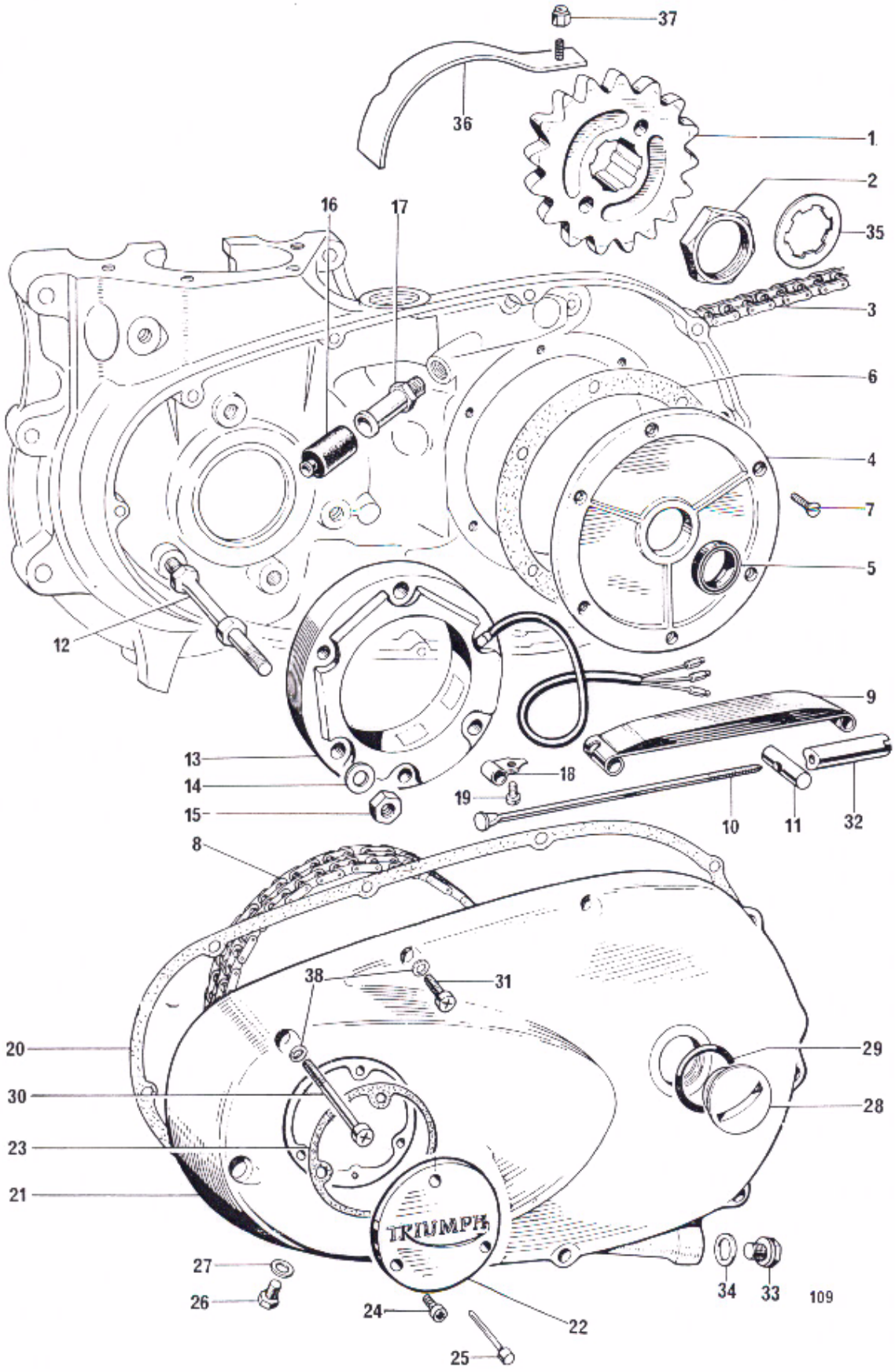

Fig. 11. CHAINCASE AND CHAINS

Ref. No.	Part No.	DESCRIPTION	QUANTITY	REMARKS

CHAINCASE AND CHAINS

1	57–1558	Gearbox sprocket (17 teeth)	Available	
1	57–1476/18	Gearbox sprocket (18 teeth)	1	
2	57–2536	Gearbox sprocket nut	1	
3	60–3122	Rear chain $\frac{5}{8}$ in. x $\frac{1}{4}$ in. x 110 links	1	
4	70–7037	Cover plate	1	
5	70–7565	Oil seal	1	
6	71–1419	Joint washer	1	
7	70–3821	Countersunk screw ($\frac{5}{16}$ in. U.H.)	6	
8	60–0358	Primary chain, $\frac{3}{8}$ in. Duplex 78 links	1	
9	70–6283	Chain tensioner blade	1	
10	70–4152	Tie rod	1	
11	70–4148	Trunnion	1	
12	70–9495	Stud ($3\frac{5}{16}$ in. O.A.)	3	
13	47205	Stator, RM 21 (99-1006)	1	
14	60–4247	Plain washer	3	
15	14–0702	Nut	3	
16	70–4144	Rubber grommet	1	
17	70–8992	Sleeve nut	1	
18	70–1509	Clip	1	
19	21–1920	Setscrew	1	
20	71–1456	Joint washer	1	
21	70–9249	Chaincase	1	
22	57–2440	Rotor cover	1	
23	71–1457	Joint washer	1	
24	82–4129	Screw	3	
25	57–2537	Ignition pointer...	1	
26	14–6101	Level plug	1	
27	70–2441	Copper washer	2	
28	57–2166	Filler plug	1	
29	70–8782	"O" ring	1	
30	21–1878	Screw ($2\frac{3}{4}$ in. U.H.)	3	
31	14–6609	Screw	7	
32	70–9703	Adjuster sleeve nut	1	
33	57–2259	Drain plug	1	
34	70–6299	Fibre washer	1	
35	57–2056	Tab washer	1	
36	70–7571	Crankcase protector	1	
37	14–1301	Self-locking nut	1	
38	60–3963	Washer	14	

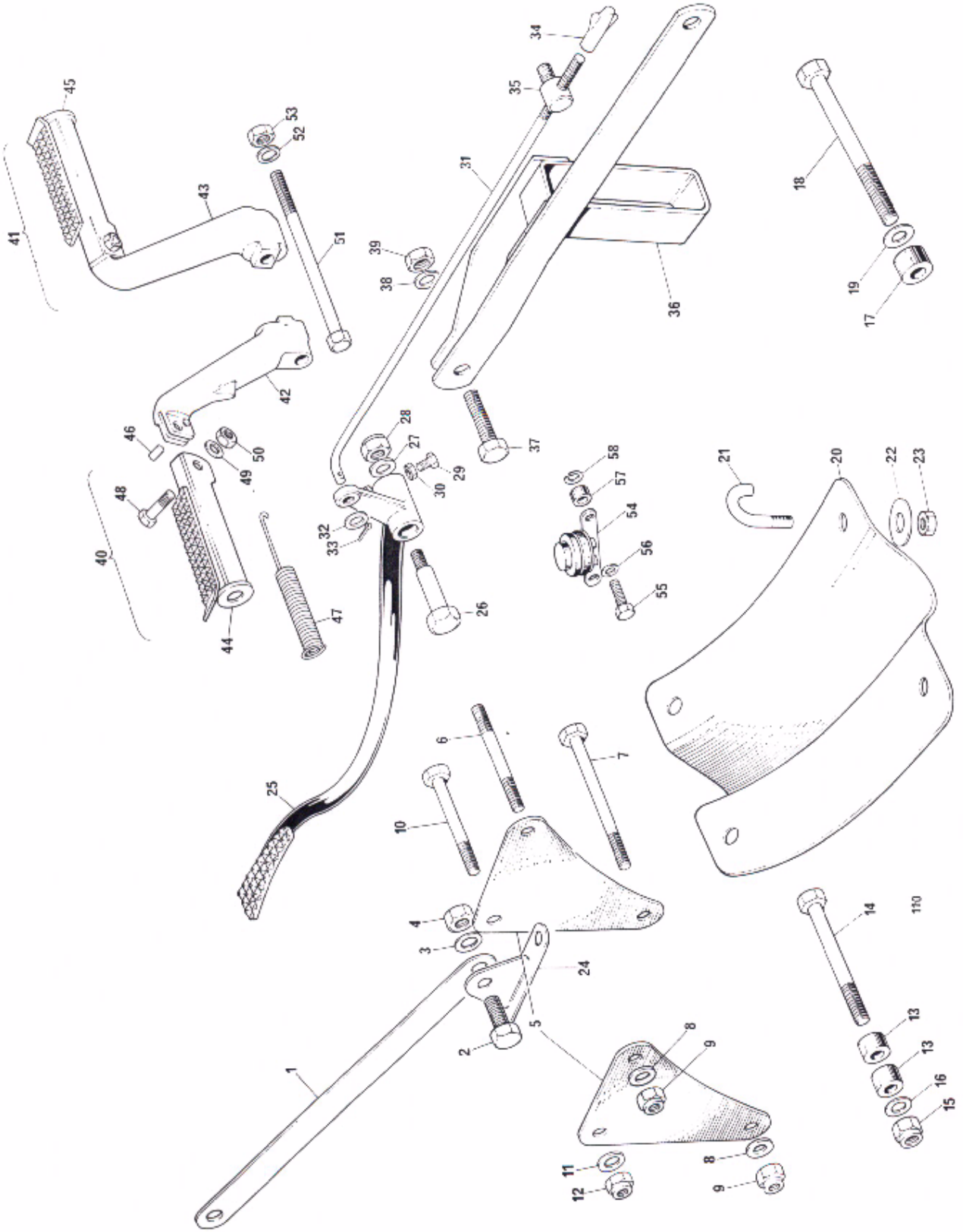

Fig. 11. MOTOR FIXINGS, BRAKE PEDAL AND FOOTRESTS

Ref. No.	Part No.	DESCRIPTION	QUANTITY	REMARKS

MOTOR FIXINGS, BRAKE PEDAL AND FOOTRESTS

1	83–4208	Motor steady strap	1	
2	14–0126	Bolt — Steady strap to plate and frame	2	
3	60–2331	Washer — Steady strap to plate and frame	2	
4	14–1303	Nut — Steady strap to plate and frame	2	
5	83–3590	Motor plate—front	2	
6	21–2217	Stud — Motor plates to crankcase	1	
7	14–0225	Bolt — Motor plates to crankcase	1	
8	60–4247	Washer — Motor plates to crankcase	3	
9	14–0302	Nut — Motor plates to crankcase	3	
10	14–0239	Bolt — Motor plates to frame	1	
11	60–2331	Washer — Motor plates to frame	1	
12	14–1303	Nut — Motor plates to frame	1	
13	37–2338	Spacer — Motor fixing—bottom	2	
14	14–0243	Bolt — Motor fixing—bottom	1	
15	14–1303	Nut — Motor fixing—bottom	1	
16	60–2331	Washer — Motor fixing—bottom	2	
17	83–4210	Spacer — Motor fixing—rear	1	
18	21–2152	Bolt — Motor fixing—rear	1	
19	60–2419	Washer — Motor fixing—rear	1	
20	83–3856	Crankcase undershield	1	
21	21–2155	'U' bolt — Crankcase undershield to frame	4	
22	60–2320	Washer — Crankcase undershield to frame	4	
23	14–1301	Nut — Crankcase undershield to frame	4	
24	83–4207	Motor steady plate	1	
25	83–4747	Rear brake pedal	1	
26	21–2045	Pivot pin	1	
27	70–8084	Washer	1	
28	14–1303	Nut	1	
29	14–0105	Adjuster screw	1	
30	14–0401	Adjuster nut	1	
31	83–2616	Brake rod	1	
32	83–4277	Distance piece	1	
33	—	Split pin ($\frac{1}{16}$ in. x $\frac{3}{8}$ in.)	Reference only	
34	82–7387	Adjuster nut	1	
35	37–1467	Pivot pin	1	
36	83–4218	Chain guide and torque arm assembly	1	
37	14–0129	Bolt — Torque arm front attachment	1	
38	70–1330	Washer — Torque arm front attachment	1	
39	14–1303	Nut — Torque arm front attachment	1	
40	83–4749	FOLDING FOOTREST ASSEMBLY—L.H.	1	
41	83–4750	FOLDING FOOTREST ASSEMBLY—R.H.	1	
42	83–4663	Footrest bracket—L.H.	1	
43	83–4665	Footrest bracket—R.H.	1	
44	83–4684	Footrest—L.H.	1	
45	83–4685	Footrest—R.H.	1	
46	83–3094	Anchor pin	1	
47	83–3095	Return spring	1	

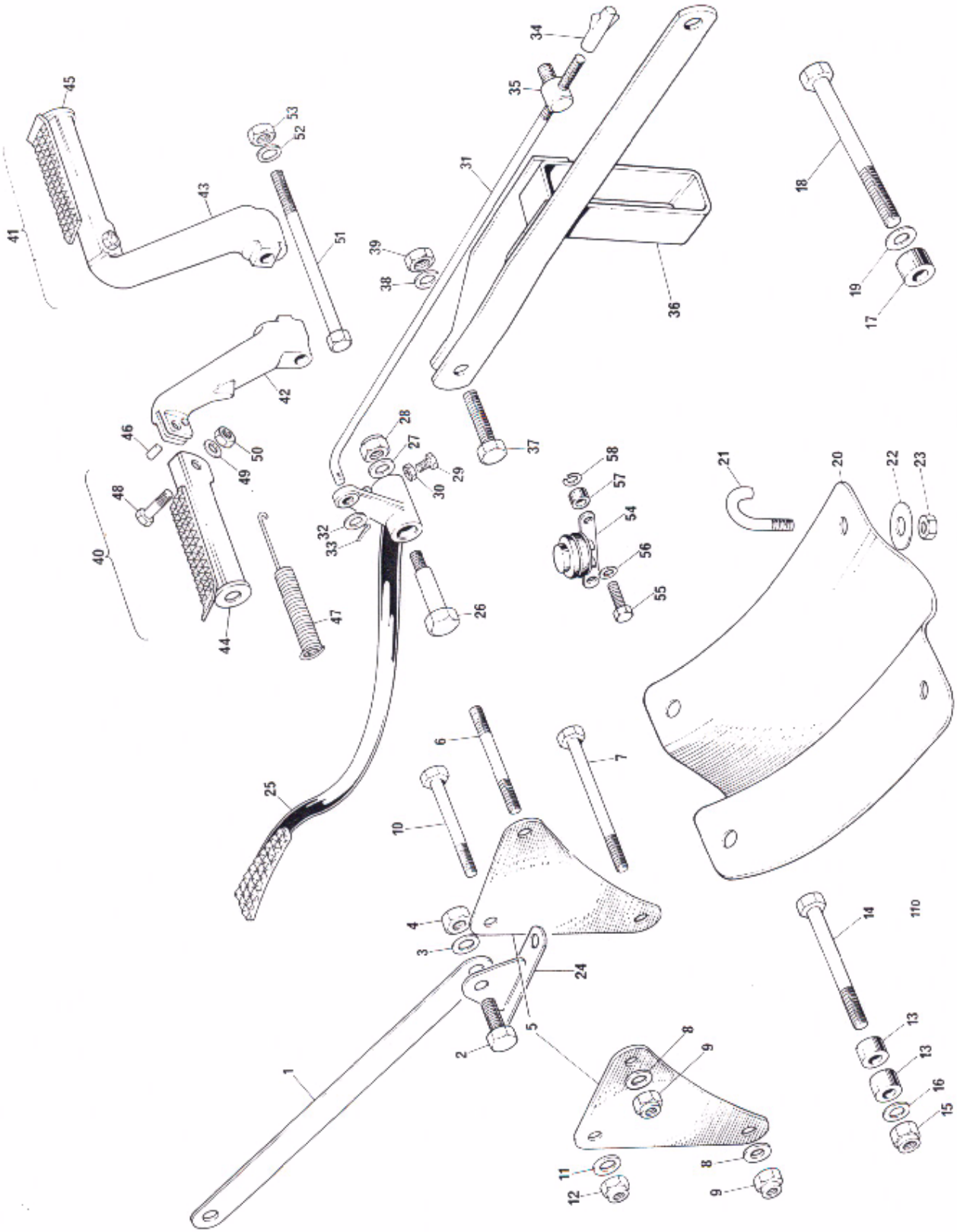

Fig. 11. MOTOR FIXINGS, BRAKE PEDAL AND FOOTRESTS

Ref. No.	Part No.	DESCRIPTION	QUANTITY	REMARKS

MOTOR FIXINGS, BRAKE PEDAL AND FOOTRESTS (continued)

48	21–0512	Bolt	1	
49	60–2321	Washer } Footrest to bracket	1	
50	14–1302	Nut	1	
51	21–2175	Bolt	1	
52	60–2323	Washer } Footrest bracket to frame	1	
53	14–1304	Nut	1	
54	34815	Stop light switch (99-1028)	1	
55	70–3197	Screw	2	
56	60–4249	Washer } Stop light switch attachment	2	
57	82–7044	Distance piece	2	
58	60–2426	Spring washer	2	

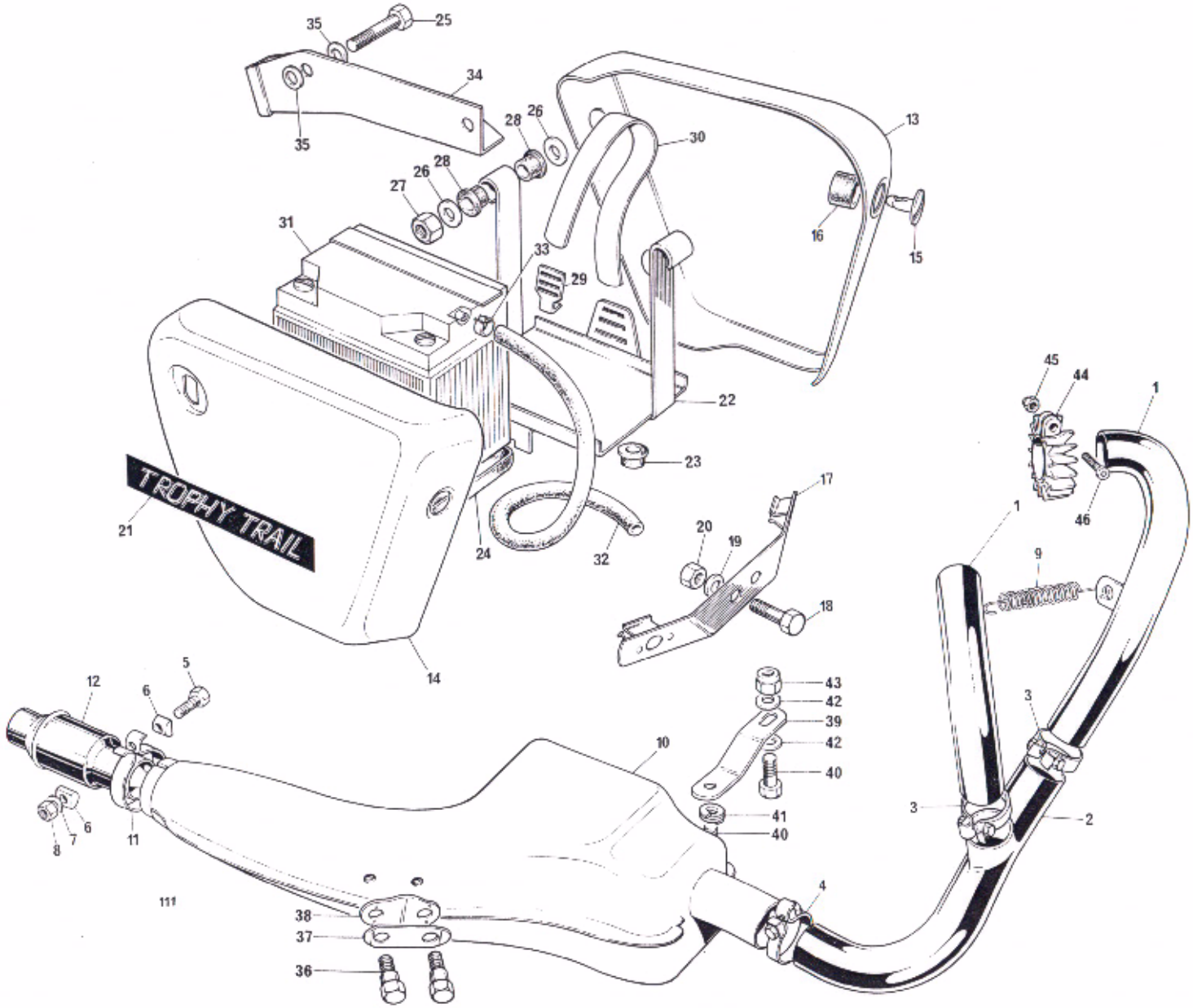

Fig. 12. EXHAUST SYSTEM, SIDE COVERS AND BATTERY

Ref. No.	Part No.	DESCRIPTION	QUANTITY	REMARKS

EXHAUST SYSTEM SIDE COVERS AND BATTERY

1	71–3534	Exhaust pipe	2	
2	71–3536	Coupling pipe	1	
3	70–7512	Clip	2	
4	70–3874	Clip	1	
5	14–0219	Bolt (Exhaust pipes and Muffler clips)	4	
6	70–3768	"D" Washer (Exhaust pipes and Muffler clips)	8	
7	60–2428	Washer (Exhaust pipes and Muffler clips)	4	
8	21–1908	Nut (Exhaust pipes and Muffler clips)	4	
9	71–3476	Spring	2	
10	71–3062	Muffler	1	
11	71–3524	Clip	1	
12	KS500	Tailpipe (Krizman)	Reference only	
13	83–4906	Side cover—L.H.	1	
14	83–4907	Side cover—R.H.	1	
15	OF522	Oddie fastener	Reference only	
16	OF618	Rubber washer	Reference only	
17	83–4905	Front fixing bracket	1	
18	14–0103	Bolt (Front fixing bracket)	1	
18	14–0102	Bolt (Front fixing bracket)	1	
19	21–0602	Washer (Front fixing bracket)	2	
20	14–1301	Nut (Front fixing bracket)	2	
21	60–4160	Transfer	2	
22	83–2018	Battery carrier	1	
23	83–2006	Locating rubber	4	
24	82–9003	Support tray rubber	1	
25	21–2060	Bolt (Carrier support)	2	
26	83–1829	Washer (Carrier support)	4	
27	14–1301	Nut (Carrier support)	2	
28	83–2204	Rubber (Carrier support)	4	
29	82–9004	Battery strap hook	1	
30	82–9005	Battery strap	1	
31	54027029	Battery PUZ 5A (99-0719)	1	
32	60–0980	Vent pipe	1	
33	60–0981	Clip	1	
34	83–4113	Tool tray	1	
35	60–2347	Washer	4	
36	21–2208	Bolt (Muffler attachment—R.H.)	2	
37	83–4913	Tab washer (Muffler attachment—R.H.)	1	
38	71–3561	Spring plate (Muffler attachment—R.H.)	1	
39	83–4912	Support strap (Muffler attachment—L.H.)	1	
40	14–0114	Bolt (Muffler attachment—L.H.)	2	
41	60–2438	Washer (Muffler attachment—L.H.)	1	
42	60–2329	Washer (Muffler attachment—L.H.)	2	
43	14–1302	Nut (Muffler attachment—L.H.)	1	
44	71–2466	Finned clip (Exhaust pipe attachment)	2	
45	21–0778	Nut (Exhaust pipe attachment)	2	
46	21–2186	Screw (Exhaust pipe attachment)	2	

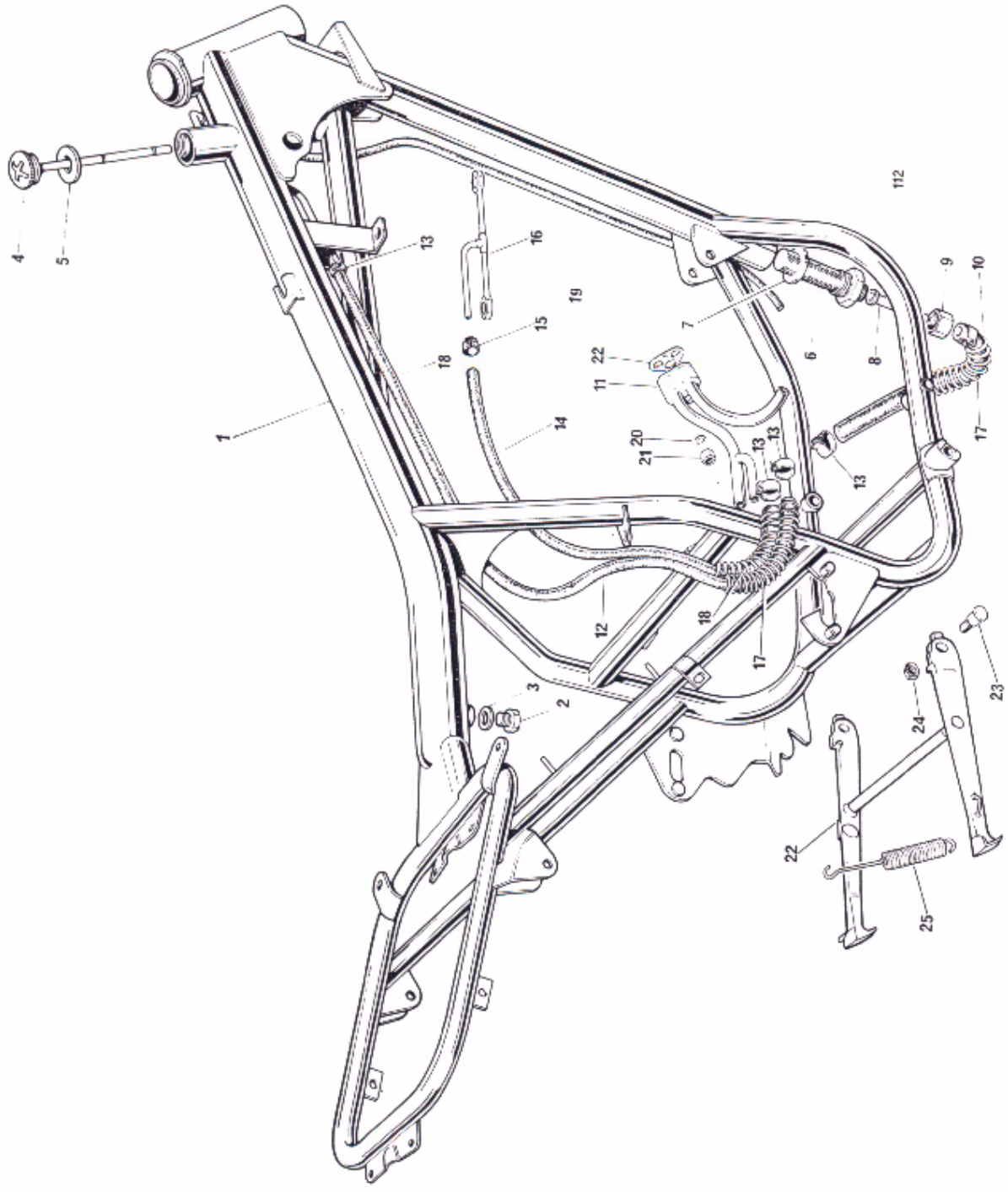

Fig. 13. FRAME

Ref. No.	Part No.	DESCRIPTION	QUANTITY	REMARKS

FRAME

1	83–4188	Frame	1	
2	21–2015	Drain plug	1	
3	71–2505	Joint washer	1	
4	83–3046	Filler cap and dipstick assembly	1	
5	60–3616	Joint washer	1	
6	82–9430	Oil tank filter	1	
7	82–1713	Joint washer	1	
8	71–3639	Oil feed pipe (at filter)	1	
9	82–3182	Union nut—feed pipe	1	
10	71–3640	Oil feed pipe—flexible...	1	
11	71–3071	Oil pipe junction block	1	
12	83–3076	Oil return pipe—flexible	1	
13	70–6848	Clip—oil pipes	4	
14	70–8016	Rocker feed pipe—flexible	1	
15	70–8111	Clip—rocker feed pipe	1	
16	71–3084	Rocker connecting pipe	1	
17	83–4380	Protection spring—feed and return pipes	2	
18	83–4381	Protection spring—rocker feed pipe	1	
19	83–3077	Breather pipe	1	
20	70–3446	Washer } Oil junction block to crankcase	1	
21	21–1908	Nut }	1	
22	71–3754	Joint washer	1	

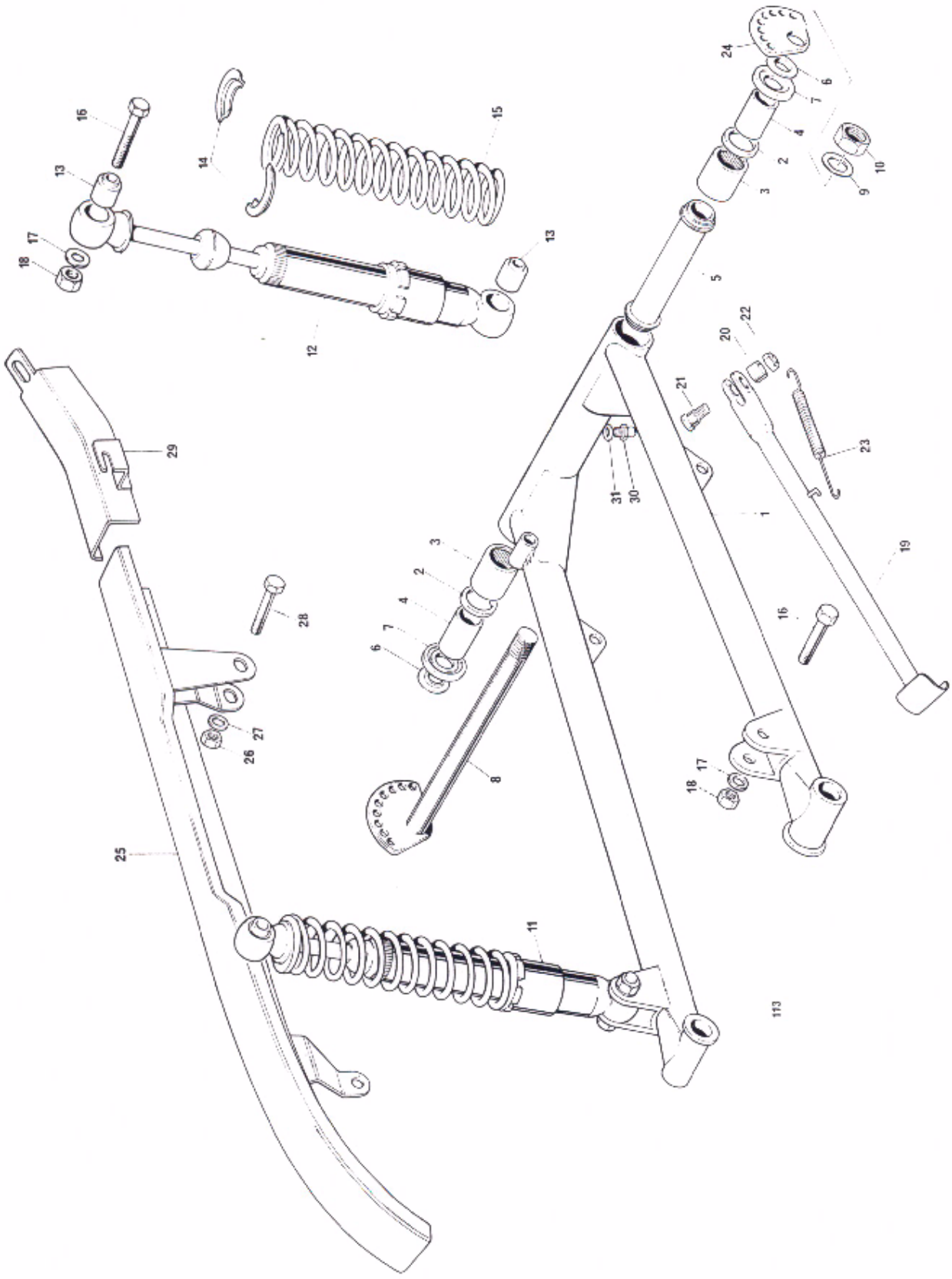

Fig. 14. SWINGING ARM AND SUSPENSION UNITS

Ref. No.	Part No.	DESCRIPTION	QUANTITY	REMARKS

SWINGING ARM AND SUSPENSION UNITS

1	83–4180	Swinging arm	1
2	83–2244	Oil seal	2
3	83–2245	Bearing	2
4	83–2012	Sleeve	2
5	83–1969	Spacer tube	1
6	83–2233	Thrust washer	2
7	83–3014	Seal	2
8	83–3554	Spindle	1
9	37–2085	Washer	1
10	21–0755	Nut	1
11	64052453	Suspension unit (D3116)	2
12	2455	Damper unit (99-1185)	2
13	64533	Bonded bush (99-1186)	4
14	9054/171	Spring retainer (99-0107)	4
15	64543708	Spring (100 lb.)(G.G.)(99-1048)	4
16	21–0684	Bolt — Suspension unit fixings	2
16	14–0234	Bolt — Suspension unit fixings	2
17	60–2331	Washer — Suspension unit fixings	4
18	14–1303	Nut — Suspension unit fixings	4
19	83–4278	Prop stand	1
20	83–3165	Distance piece	1
21	21–2105	Screw	1
22	14–1303	Nut	1
23	83–2896	Spring	1
24	83–3556	Adjuster, rear chain	1
25	83–2224	Rear chainguard	1
26	14–1302	Nut — Chainguard to swinging arm	1
27	60–2339	Washer — Chainguard to swinging arm	1
28	14–0221	Bolt — Chainguard to swinging arm	1
29	83–4461	Chainguard extension	1
30	60–1841	Grease nipple	1
31	71–2501	Fibre washer	1

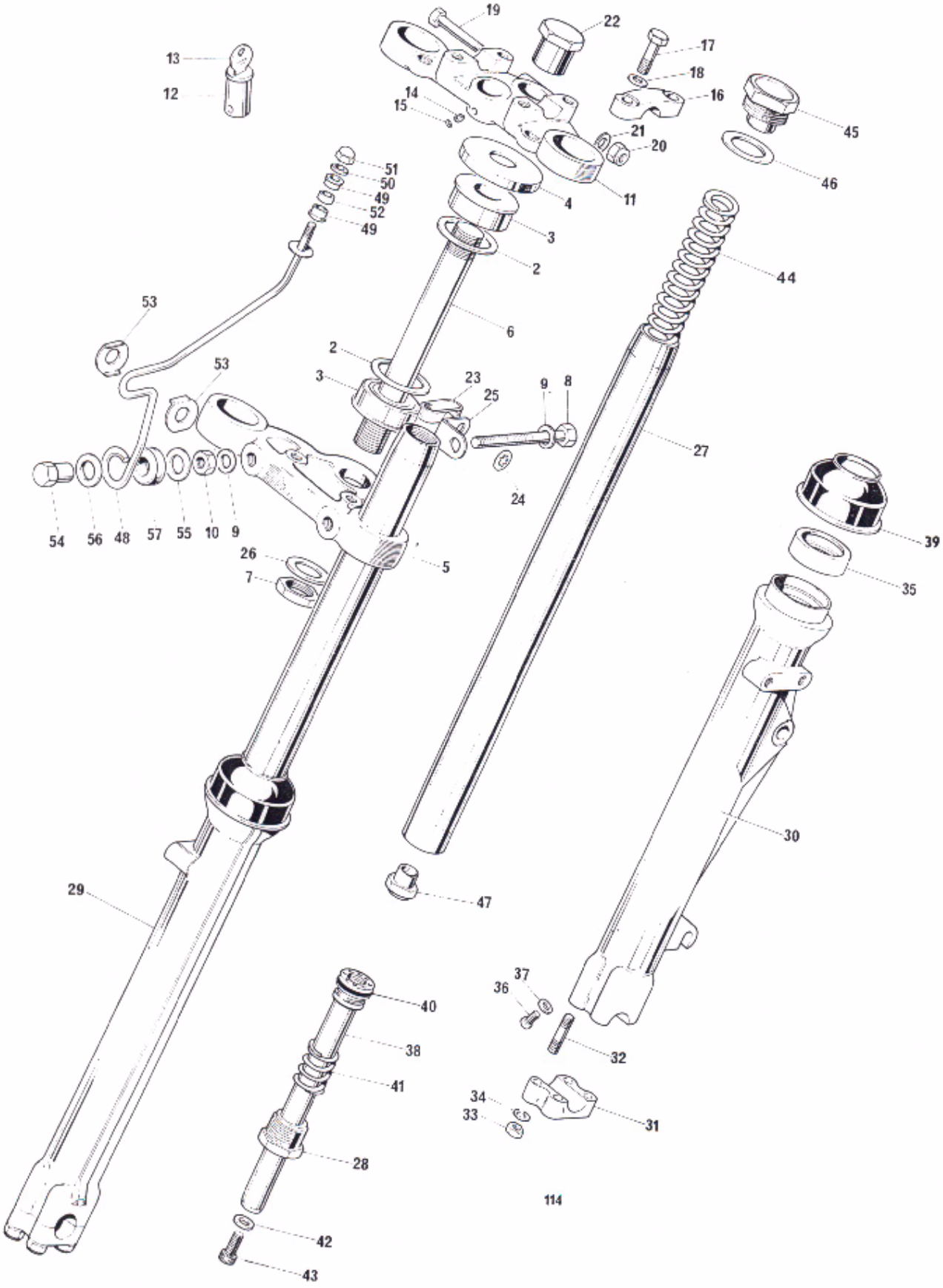

Fig. 15. TELESCOPIC FORKS

TELESCOPIC FORKS

Ref. No.	Part No.	DESCRIPTION	QUANTITY	REMARKS
1	97–4332	FORK ASSEMBLY	1	
2	83–2007	Abutment ring	2	
3	97–4031	Bearing	2	
4	97–4028	Dust cover	1	
5	97–4313	Bottom yoke	1	
6	97–4319	Steering stem	1	
7	14–7308	Steering stem nut (bottom)	1	
8	14–0240	Pinch bolt } Bottom yoke	2	
9	21–2138	Washer } Bottom yoke	4	
10	14–1203	Nut } Bottom yoke	2	
11	97–3985	Top yoke	1	
12	82–6738	Anti theft lock c/w key	1	
13	60–0623	Key (state serial no.)	1	
14	21–0578	Grub screw	1	
15	97–2266	Sealing washer	1	
16	97–0722	Handlebar cap	2	
17	14–6219	Bolt	4	
18	83–3549	Washer	4	
19	14–0236	Pinch bolt } Top yoke	1	
20	14–1303	Nut } Top yoke	1	
21	70–8084	Washer } Top yoke	1	
22	97–4317	Steering stem nut	1	
23	97–2270	Brake cable retainer	2	
24	82–8245	Washer	2	
25	97–3682	Retaining bracket	2	
26	60–2336	Washer—bottom steering stem nut	1	
27	97–4455	Stanchion	2	
28	97–4076	End plug	2	
29	97–4342	OUTER MEMBER—L.H.	1	
30	97–4344	OUTER MEMBER—R.H.	1	
31	97–3947	Cap—wheel spindle	2	
32	21–2102	Stud	8	
33	14–0302	Nut	8	
34	60–2428	Washer	8	
35	97–4001	Oil seal outer member	2	
36	97–3894	Drain plug	2	
37	97–3893	Washer	2	
38	97–4325	Damper tube and valve assembly	2	
39	97–4002	Scraper sleeve	2	
40	97–4003	"O" ring	2	
41	97–4009	Spring	2	
42	97–4004	Sealing washer	2	
43	14–1019	Bolt	2	
44	97–4011	Main spring	2	
45	97–4258	Top cap nut	2	
46	97–4166	Washer, fork top nut	2	
47	97–4012	Nut, damper valve	2	

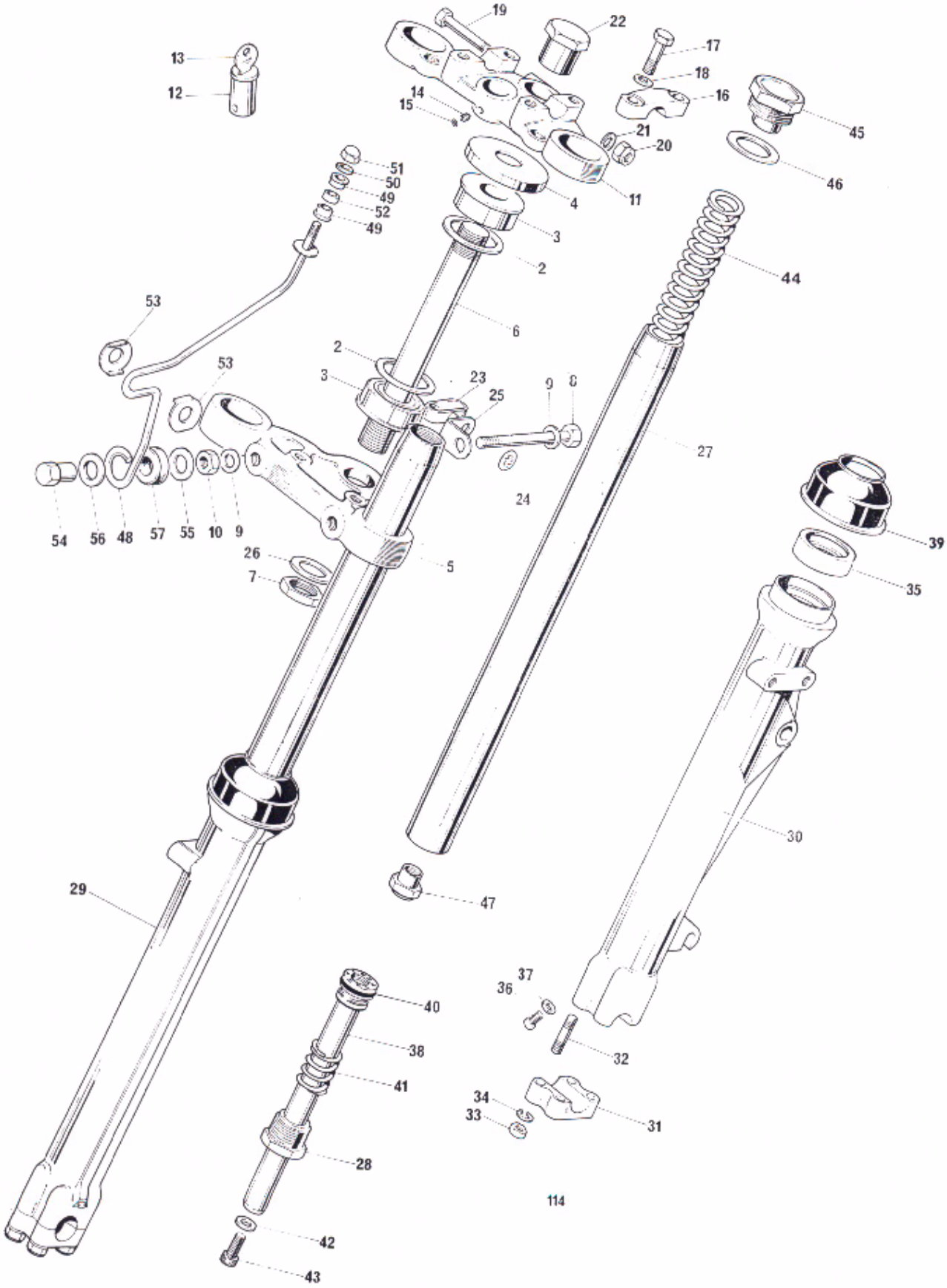

Fig. 15. TELESCOPIC FORKS

TELESCOPIC FORKS (continued)

Ref. No.	Part No.	DESCRIPTION	QUANTITY	REMARKS
48	97–4048	Headlamp bracket—L.H.	1	
48	97–4050	Headlamp bracket—R.H.	1	
49	83–2209	Headlamp mounting bush	4	
50	60–2338	Washer	2	
51	21–1809	Nut — Headlamp bracket—top fixing	2	
52	83–2211	Spacer	2	
53	83–2210	Clamp washer	4	
54	21–2062	Sleeve nut	2	
55	82–9046	Washer — Headlamp bracket—bottom fixing	2	
56	60–2333	Washer	2	
57	60–2630	Rubber grommet	2	

1 FRONT WHEEL COMPLETE

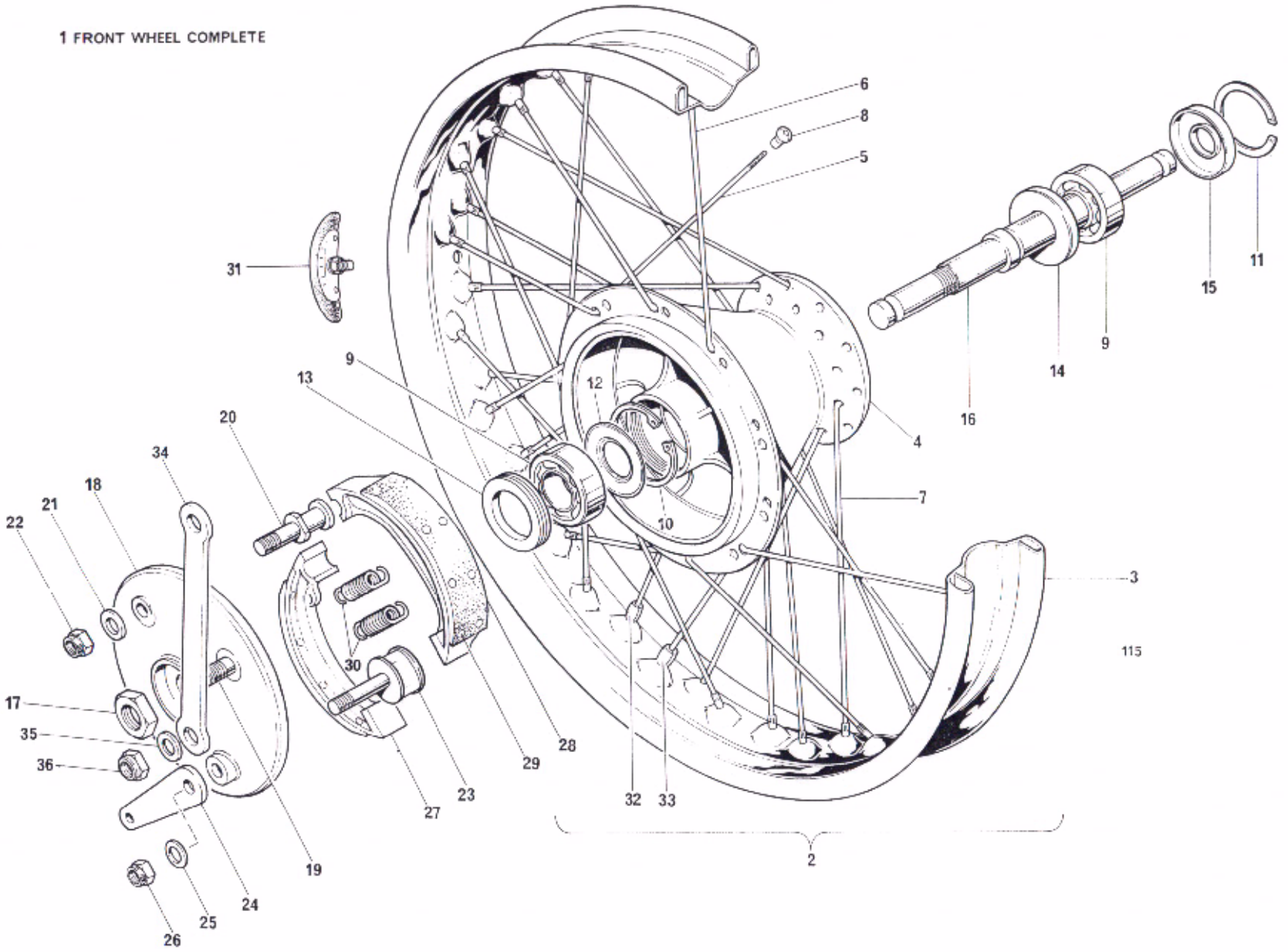

Fig. 16. FRONT WHEEL

Ref. No.	Part No.	DESCRIPTION	QUANTITY	REMARKS

FRONT WHEEL

1	37–4149	FRONT WHEEL COMPLETE	1	
2	37–4150	RIM, SPOKES AND HUB ASSEMBLY	1	
3	37–4151	Front wheel rim (WM 1 x 21)	1	
4	37–3702	Brake drum and hub	1	
5	37–4152	Spoke (R.H. inner)	10	
6	37–4153	Spoke (R.H. outer)	10	
7	37–4154	Spoke (L.H.)	20	
8	37–2294	Nipple	40	
9	37–0653	Bearing	2	
10	60–2632	Circlip—R.H.	2	
11	57–0280	Circlip—L.H.	1	
12	37–3797	Grease retainer	1	
13	37–3759	Locking ring	1	
14	37–1481	Grease cap (inner)	1	
15	37–1237	Grease cap (outer)	1	
16	37–3796	Spindle	1	
17	37–2058	Spindle locknut	1	
18	37–3704	Brake anchor plate	1	
19	21–2063	Stud-anchor plate torque reaction	1	
20	37–3798	Fulcrum pin (Anchor plate)	1	
21	60–2331	Washer (Anchor plate)	1	
22	14–1303	Nut (Anchor plate)	1	
23	37–3799	Brake cam	1	
24	37–3694	Brake lever	1	
25	60–2331	Washer (Brake lever)	1	
26	14–1303	Nut (Brake lever)	1	
27	37–3804	BRAKE SHOE C/W LINING	2	
28	Reference only	Lining	1	each shoe
29	Reference only	Rivet	8	each shoe
30	37–2328	Return spring	2	
31	37–3584	Security bolt	1	
32	37–3969	Balance weight (½ oz.)	As required	
33	37–3970	Balance weight (1 oz)	As required	
34	83–2660	Front brake anchor strap	1	
35	60–2332	Washer (Anchor strap)	2	
36	14–1304	Nut (Anchor strap)	2	

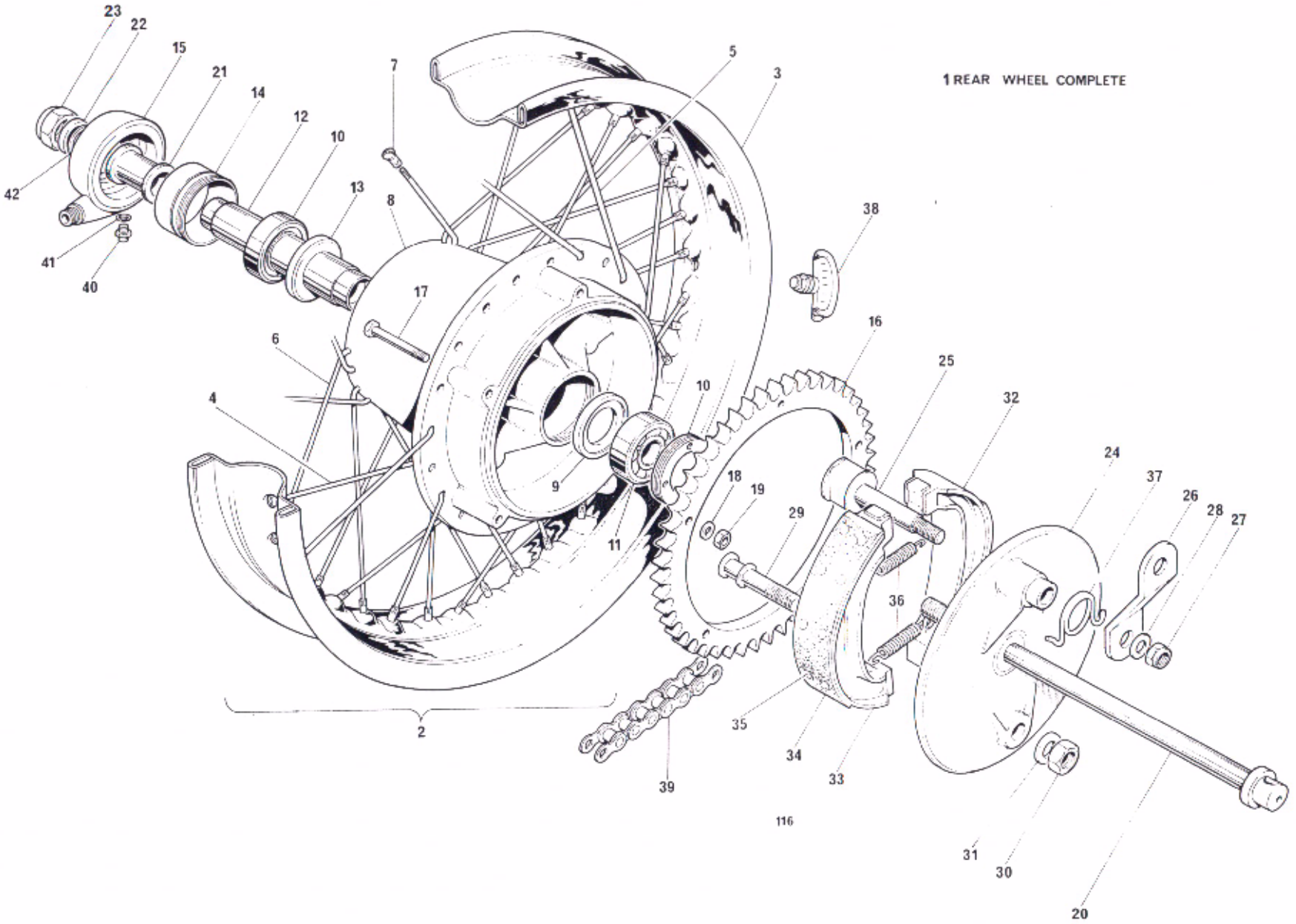

Fig. 17. REAR WHEEL

Ref. No.	Part No.	DESCRIPTION	QUANTITY	REMARKS

REAR WHEEL

1	37–4096	REAR WHEEL COMPLETE	1	
2	37–3782	Rim, spokes and hub assembly	1	
3	37–3784	Rim (WM 3 x 18)	1	
4	37–3724	Spoke (L.H. inner)	10	
5	37–3725	Spoke (L.H.outer)	10	
6	37–3726	Spoke (R.H.)	20	
7	37–2294	Nipple...	40	
8	37–3773	Drum and hub	1	
9	37–3749	Bearing support ring	1	
10	37–0653	Bearing	2	
11	37–3752	Locking ring	1	
12	37–3753	Bearing spacer	1	
13	37–1654	Grease retainer	1	
14	37–3751	Speedometer drive ring	1	
15	60–3215	Speedometer gearbox (BG5330/104)	1	
16	37–4140	Rear wheel sprocket—53T	1	
17	14–0207	Bolt } Sprocket to hub	5	
18	60–2320	Washer } Sprocket to hub	5	
19	14–1301	Nut } Sprocket to hub	5	
20	37–3977	Spindle	1	
21	37–3750	Distance piece	1	
22	83–2266	Washer—spindle	1	
23	14–1307	Nut—spindle	1	
24	37–3857	Brake anchor plate	1	
25	37–3872	Brake cam	1	
26	37–4034	Brake lever	1	
27	14–1303	Nut } Brake lever	1	
28	60–2331	Washer } Brake lever	1	
29	37–3870	Rear brake pivot	1	
30	14–0305	Nut } Torque arm to pivot	1	
31	60–2431	Washer } Torque arm to pivot	1	
32	37–3925	BRAKE SHOE C/W LINING (Leading)	1	
33	37–3926	BRAKE SHOE C/W LINING (Trailing)	1	
34	Reference only	Lining	1 } each shoe	
35	Reference only	Rivet	8 } each shoe	
36	37–2328	Return spring—brake shoe	2	
37	37–4049	Return spring—brake lever	1	
38	37–3468	Security bolt	2	
39	60–3297	Rear chain (110 links)	1	
40	60–1841	Grease nipple	1	
41	71–2501	Fibre washer	1	
42	60–2335	Washer	1	

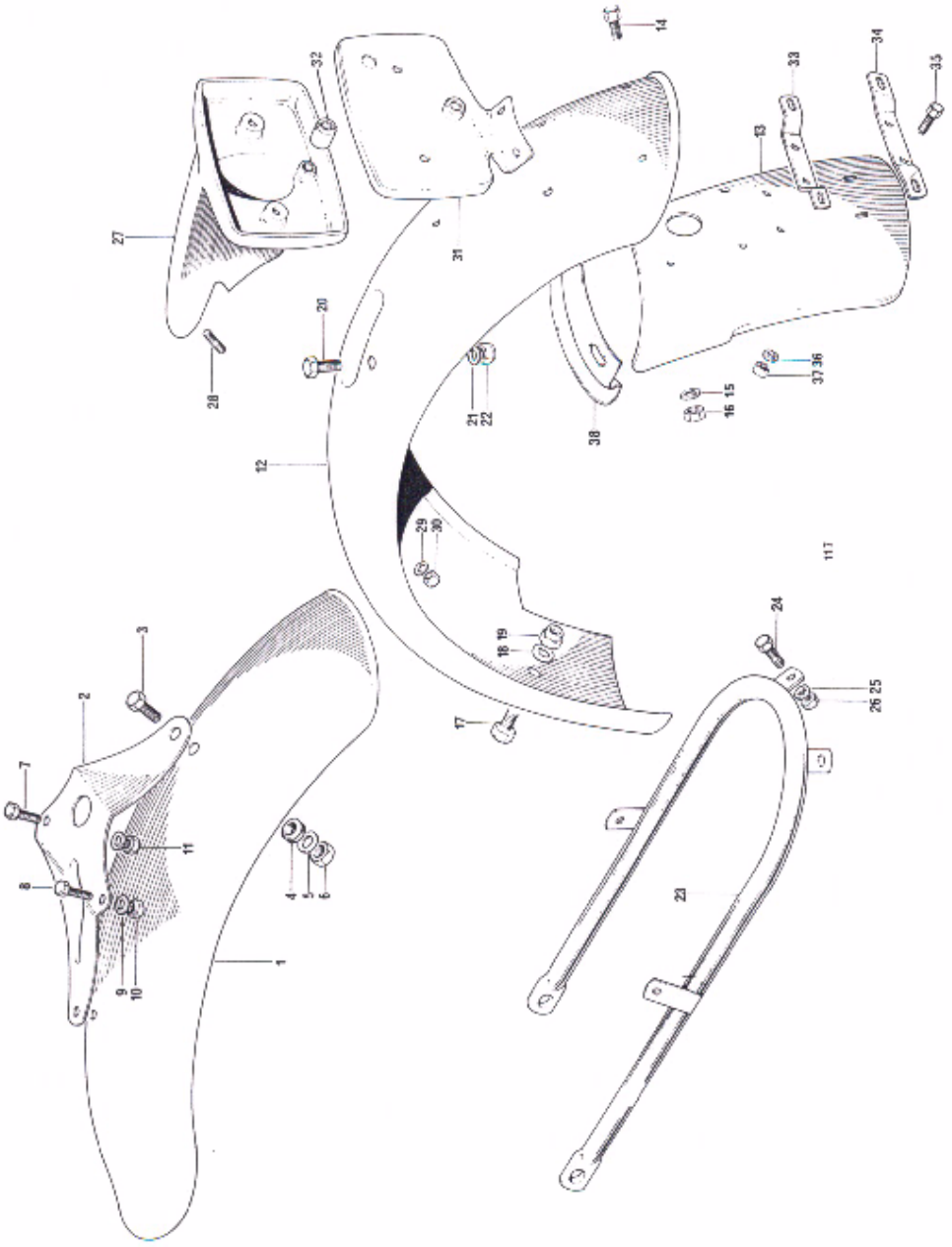

Fig. 18. FENDERS

Ref. No.	Part No.	DESCRIPTION	QUANTITY	REMARKS

FENDERS

1	97–4333	Front fender	1	
2	97–4359	Support bracket	1	
3	14–0114	Bolt — Fender to support bracket	2	
4	60–3242	Grommet — Fender to support bracket	2	
5	60–2348	Washer — Fender to support bracket	2	
6	14–1302	Nut — Fender to support bracket	2	
7	14–6114	Bolt — Support bracket to bottom yoke	1	
8	14–6118	Bolt — Support bracket to bottom yoke	1	
9	60–2348	Washer — Support bracket to bottom yoke	2	
10	14–7302	Nut — Support bracket to bottom yoke	1	
11	14–1302	Nut — Support bracket to bottom yoke	1	
12	83–5003	*Rear fender	1	
13	83–4842	*Rear fender extension	1	
14	14–0101	*Bolt — Rear fender extension to rear fender	2	
15	60–2329	*Washer — Rear fender extension to rear fender	2	
16	14–1301	*Nut — Rear fender extension to rear fender	2	
17	14–0101	Bolt — Rear fender attachment—bottom	1	
18	60–2347	Washer — Rear fender attachment—bottom	2	
19	14–1301	Nut — Rear fender attachment—bottom	1	
20	14–0101	Bolt — Rear fender attachment—top	4	
21	60–2347	Washer — Rear fender attachment—top	8	
22	14–1301	Nut — Rear fender attachment—top	4	
23	83–4758	Lifting handle	1	
24	14–0102	Bolt — Lifting handle to rear fender	2	
25	60–2347	Washer — Lifting handle to rear fender	4	
26	14–1301	Nut — Lifting handle to rear fender	2	
27	83–4774	Tail lamp support	1	
28	14–1401	Stud — Tail lamp support to fender	1	
29	60–2329	Washer — Tail lamp support to fender	1	
30	14–1301	Nut — Tail lamp support to fender	1	
31	83–4799	Support plate	1	
Not illus.	14–7804	Screw—support plate	1	
32	83–4800	Nut—tail lamp attachment	2	
33	83–4784	Rear no. plate bracket—top	1	
34	82–6850	Rear no. plate bracket—bottom	1	
35	14–0102	Bolt — No. plate brackets to fender	4	
36	60–2329	Washer — No. plate brackets to fender	4	
37	14–1301	Nut — No. plate brackets to fender	4	
38	83–4806	Wiring protector	1	

* Replaced on later models by 83–4848 Rear fender.

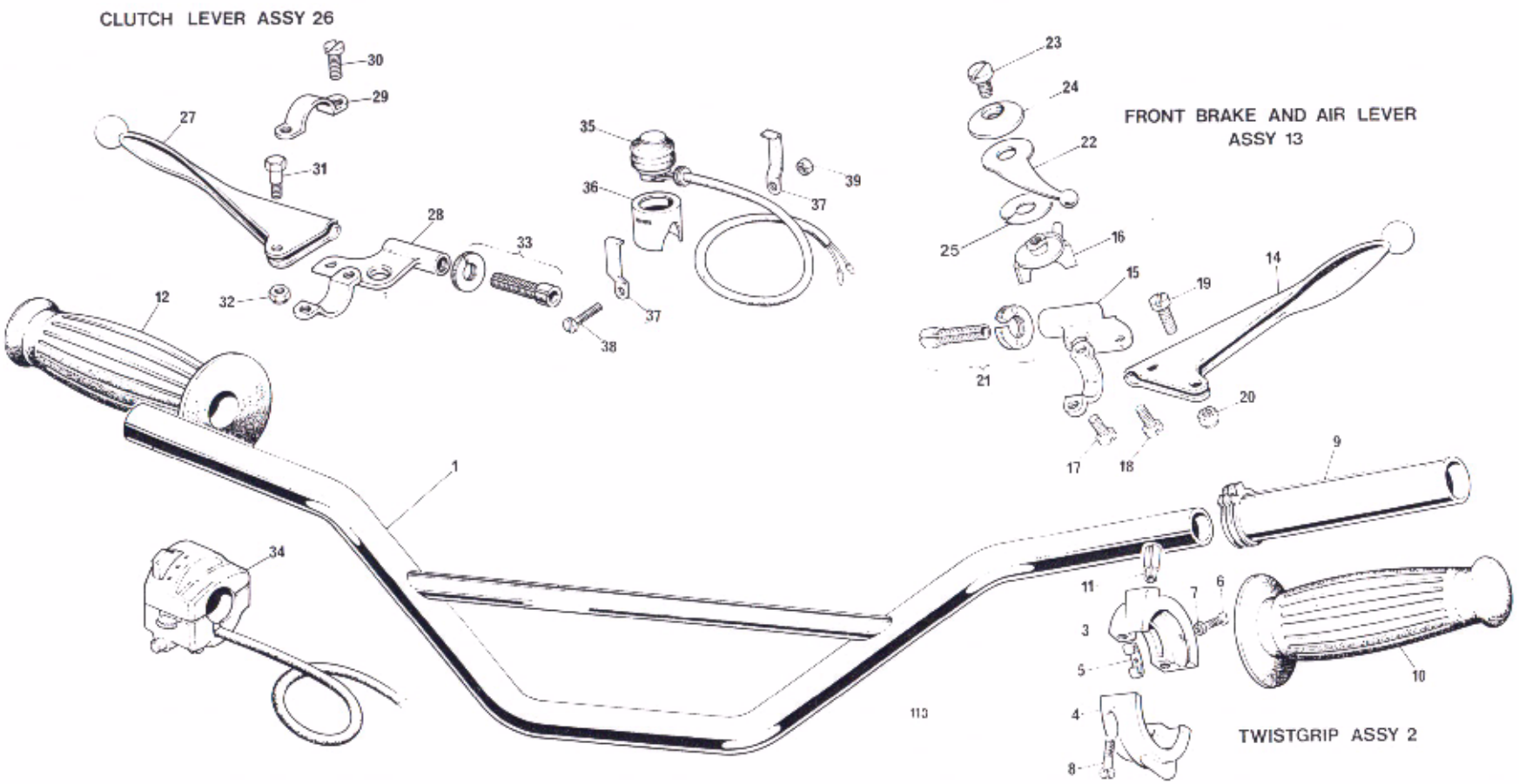

Fig. 19. HANDLEBARS AND CONTROL LEVERS

Ref. No.	Part No.	DESCRIPTION	QUANTITY	REMARKS

HANDLEBARS AND CONTROL LEVERS

1	97–4062	Handlebar	1	
2	16/364	TWISTGRIP (99-0248)	1	
3	16/328	Body, top half (99-0245)	1	
4	16/329	BODY, BOTTOM HALF (99-0246)	1	
5	16/008	Spring	Reference only	
6	16/009	Screw	Reference only	
7	16/010	Locknut	Reference only	
8	11/014	Screw (99-0226)	2	
9	16/091	Rotor (99-0244)	1	
10	60–0958	Handlebar grip	1	
11	16/011	Cable stop (99-0241)	1	
12	60–0959	Handlebar grip—L.H.	1	
13	19/978	FRONT BRAKE AND AIR LEVER ASSEMBLY (D2241)	1	
14	18/754	Brake lever (ball end) (99-0262)	1	
15	19/001	Lever bracket (99-1093)	1	
16	12/619	Control body (99-0234)	1	
17	11/014	Screw (99-0226)	1	
18	11/013	Screw (99-0225)	1	
19	18/087	Fulcrum screw (99-0252)	1	
20	18/053	Self locking nut (99-0250)	1	
21	18/1708/9	Cable adjuster and nut (99-1031)	1	
22	12/556	Lever (99-0228)	1	
23	12/607	Bolt	Reference only	
24	12/606	Cap	Reference only	
25	12/033	Spring washer	Reference only	
26	19/952	CLUTCH LEVER ASSEMBLY (D.2242)	1	
27	18/752	Clutch lever (ball end) (99-0261)	1	
28	19/002	Clutch lever bracket (99-1094)	1	
29	12/595	Clamp (99-0230)	1	
30	11/014	Screw (99-0226)	2	
31	18/087	Fulcrum screw (99-0252)	1	
32	18/053	Self locking nut (99-0250)	1	
33	18/1708/9	Cable adjuster and nut (99-1031)	1	
34	60–4001	Handlebar switch (Dip, Flasher, Horn)	1	
35	35835	Cut out switch (99-0564)	1	
36	97–2259	Cup	1	
37	97–2034	Clip	2	
38	97–0687	Screw	1	
39	97–0745	Nut	1	

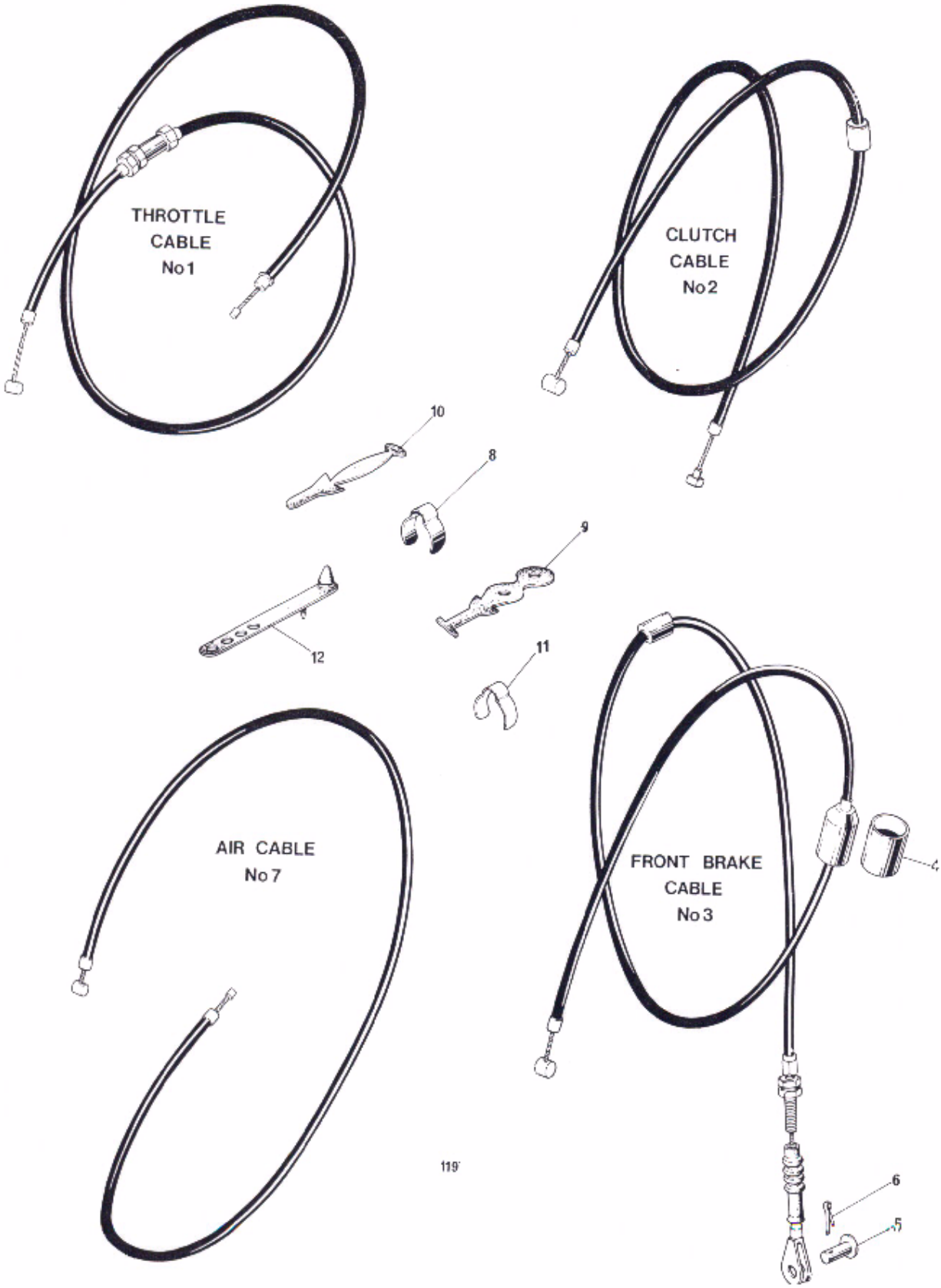

Fig. 20. CONTROL CABLES

Ref. No.	Part No.	DESCRIPTION	QUANTITY	REMARKS

CONTROL CABLES

1	60–1823	Throttle cable	1	
2	60–1994	Clutch cable	1	
3	60–4088	Front brake cable	1	
4	60–2086	Cover, stop switch	1	
5	60–4252	Clevis pin	1	
6	—	Split pin ($\frac{1}{16}$ in. x $\frac{3}{8}$ in.)	Reference only	
7	60–4190	Air control cable	1	
8	97–4112	Cable clip, handlebar	4	
9	60–0978	Cable clip	6	
10	60–4258	Cable clip	12	
11	97–4297	Cable clip	6	
12	60–3105	Cable strap	4	

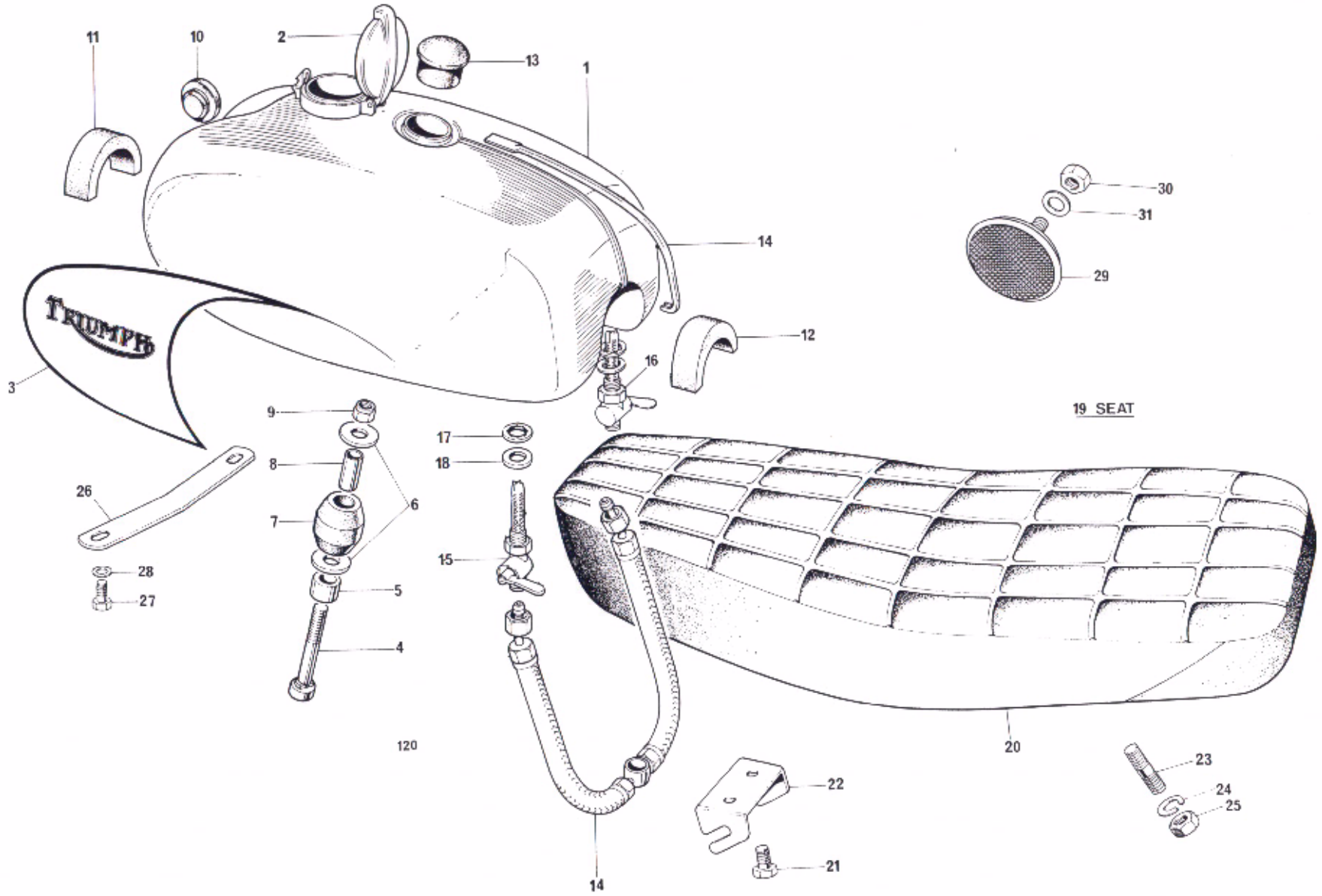

Fig. 21. GAS TANK AND SEAT

GAS TANK AND SEAT

Ref. No.	Part No.	DESCRIPTION	QUANTITY	REMARKS
1	83–4851	Petrol Tank	1	
2	83–1547	Filler cap	1	
3	60–3157	Transfer	2	
4	83–5009	Centre fixing bolt	1	
5	82–7071	Collar	1	
6	82–9065	Washer	2	
7	82–9064	Mounting rubber	1	
8	82–9063	Distance tube	1	
9	14–0302	Nut	1	
10	82–9222	Anti-roll rubber	2	
11	83–2980	Mounting rubber—front	1	
12	83–2980	Mounting rubber—rear	1	
13	83–3069	Grommet	1	
14	83–4203	Gas pipe	1	
15	83–2800	Gas tap	1	
16	83–2801	Gas tap—reserve	1	
17	70–7351	Seal	2	
18	83–0002	Washer	2	
19	83–4732	SEAT	1	
20	83–4737	Seat cover	1	
21	14–0104	Bolt — Seat attachment front	2	
22	83–2742	Bracket — Seat attachment front	1	
23	21–2109	Stud — Seat attachment—rear	2	
24	60–2428	Washer — Seat attachment—rear	2	
25	14–0302	Nut — Seat attachment—rear	2	
26	83–4722	Tie strap	1	
27	14–6113	Bolt — Tie strap to tank	2	
28	70–2287	Washer — Tie strap to tank	2	
29	57183	Reflector—amber (99-1161)	2	
30	82–4717	Nut	2	
31	60–2391	Washer	2	
Not illus.	70–2287	Serrated washer (line 9)	1	

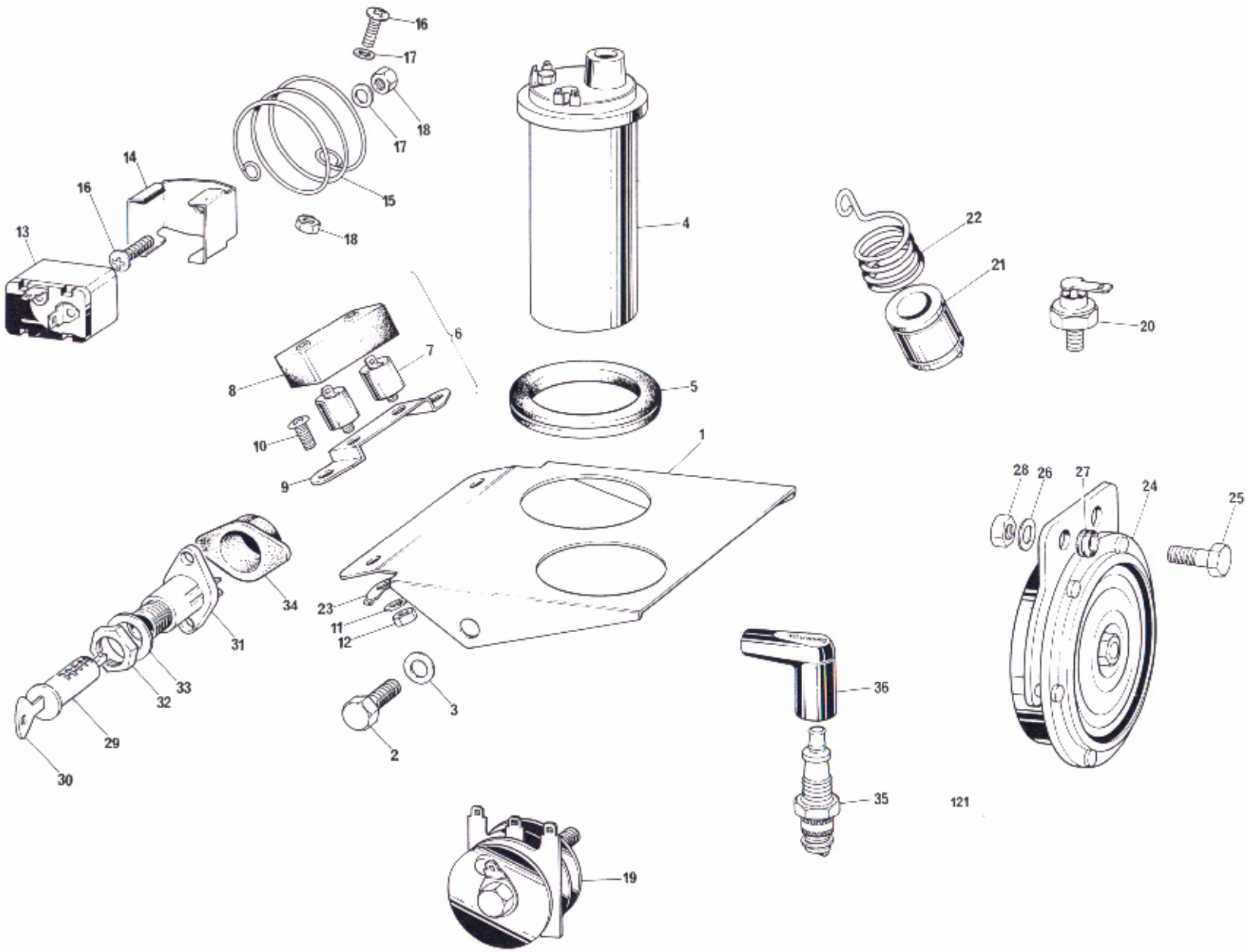

Fig. 22. ELECTRICAL COMPONENTS

Ref. No.	Part No.	DESCRIPTION	QUANTITY	REMARKS

ELECTRICAL COMPONENTS

1	83–4901	Mounting Platform—Electrical components	1	
2	14–0102	Bolt } Platform attachment	2	
3	60–2427	Washer } Platform attachment	2	
4	45223	Coil—17-M-12 (60–2206)	2	
5	83–4139	Coil grommet	2	
6	47638	CONDENSER PACK—2CP		Reference only
7	54420128	Condenser (99–1043)	2	
8	54418528	Cover (99–0767)	1	
9	54418526	Base plate (99–1160)	1	
10	21–2079	Screw } Condenser pack to platform	2	
11	60–2391	Washer } Condenser pack to platform	2	
12	21–0778	Nut } Condenser pack to platform	2	
13	35048	Flasher unit—8FL (99–1201)	1	
14	54385091	Clip (99–1204)	1	
15	54386637	Spring } Flasher unit to tool tray	1	
16	21–2079	Screw } Flasher unit to tool tray	2	
17	60–2391	Washer } Flasher unit to tool tray	2	
18	21–0778	Nut } Flasher unit to tool tray	2	
19	40972	Rectifier (99–0589)	1	
20	49345	Zener Diode (99–0590)	1	
21	54170009	Electrolytic Capacitor (99–0737)	1	
22	83–4765	Spring	1	
23	54190038	Lucar blade terminal		Reference only
24	70216	Horn—6H (99–1216)	1	
25	83–5045	Screw } Horn attachment	2	
26	60–4249	Washer } Horn attachment	2	
27	83–5046	Grommet } Horn attachment	2	
28	21–0778	Nut } Horn attachment	2	
29	82–6981	Ignition lock c/w key	1	
30	60–0622	Key (state serial number)		As required
31	31899	Ignition switch (99–0558)	1	
32	54130041	Nut (99–1000)	1	
33	97–0565	Washer, ignition switch	1	
34	97–2262	Cover, ignition switch	1	
35	N4	Spark plug		Reference only
36	60–0262	Plug cover	2	
Not illus.	54961591	Wiring harness (99–1258)	1	

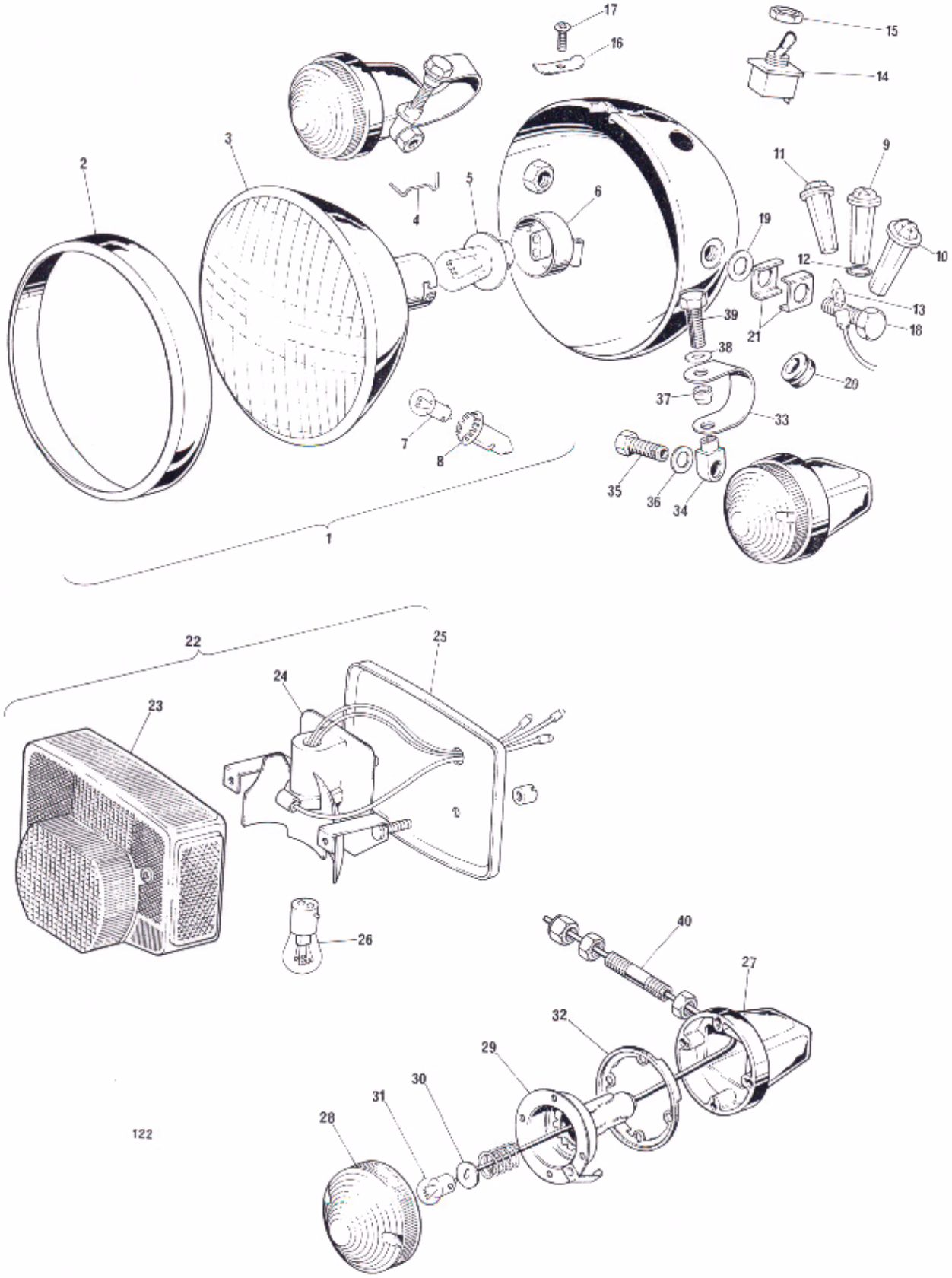

Fig. 23. HEADLAMP, TAIL LAMP AND FLASHERS

HEADLAMP, TAIL LAMP AND FLASHERS

Ref. No.	Part No.	DESCRIPTION	QUANTITY	REMARKS
1	60514	HEADLAMP—MCH 66 (99–1253)	1	
2	534343	Rim (99–0691)	1	
3	54524526	Light unit (99–1041)	1	
4	504665	Fixing wire (99–0683)	5	
5	370	Bulb, main (99–1214)	1	
6	553738	Bulb holder, main		Reference only
7	989	Bulb, pilot (99–0548)	1	
8	54573590	Bulbholder, pilot (99–0695)	1	
9	54363455	Warning light, green (99–1209)	1	
10	54363453	Warning light, amber (99–1207)	1	
11	54363454	Warning light, red (99–1208)	1	
12	54140331	Sealing washer (99–1210)	3	
13	281	Bulb (99–0537)	3	
14	34419	Lighting switch (99–1251)	1	
15	153631	Nut, lighting switch (99–1254)	1	
16	534296	Plate		Reference only
17	144921	Screw		Reference only
18	54104506	Screw, headlamp support (99–1255)	2	
19	143086	Washer, headlamp support (99–1224)	2	
20	862217	Grommet		Reference only
21	54525403	Clamp washer (99–1256)	4	
22	56513	STOP—TAIL LAMP—L917 (99–1252)	1	
23	54584930	Lens (complete with screws) (99–1257)	1	
24	54584931	Base assembly		Reference only
25	54583924	Gasket		Reference only
26	573828	Bulbholder assembly		Reference only
27	380	Bulb (99–0542)	1	
28	56147	FLASHER LAMP (99–1109)	4	
29	54581638	Lens (complete with screws) (99–1191)	1	
30	54580322	Bulb holder		Reference only
31	573832	Interior assembly		Reference only
32	382	Bulb (99–1192)	1	
33	54580300	Gasket		Reference only
34	97–4430	Clip	2	
35	97–4432	Eye nut	2	
36	97–4431	Hollow bolt	2	
37	37–2330	Washer	2	
38	97–4429	Spacer	2	
39	60–2330	Washer	2	
40	21–0589	Bolt	2	
41	60–4004	Flasher stanchion—rear (complete)	2	

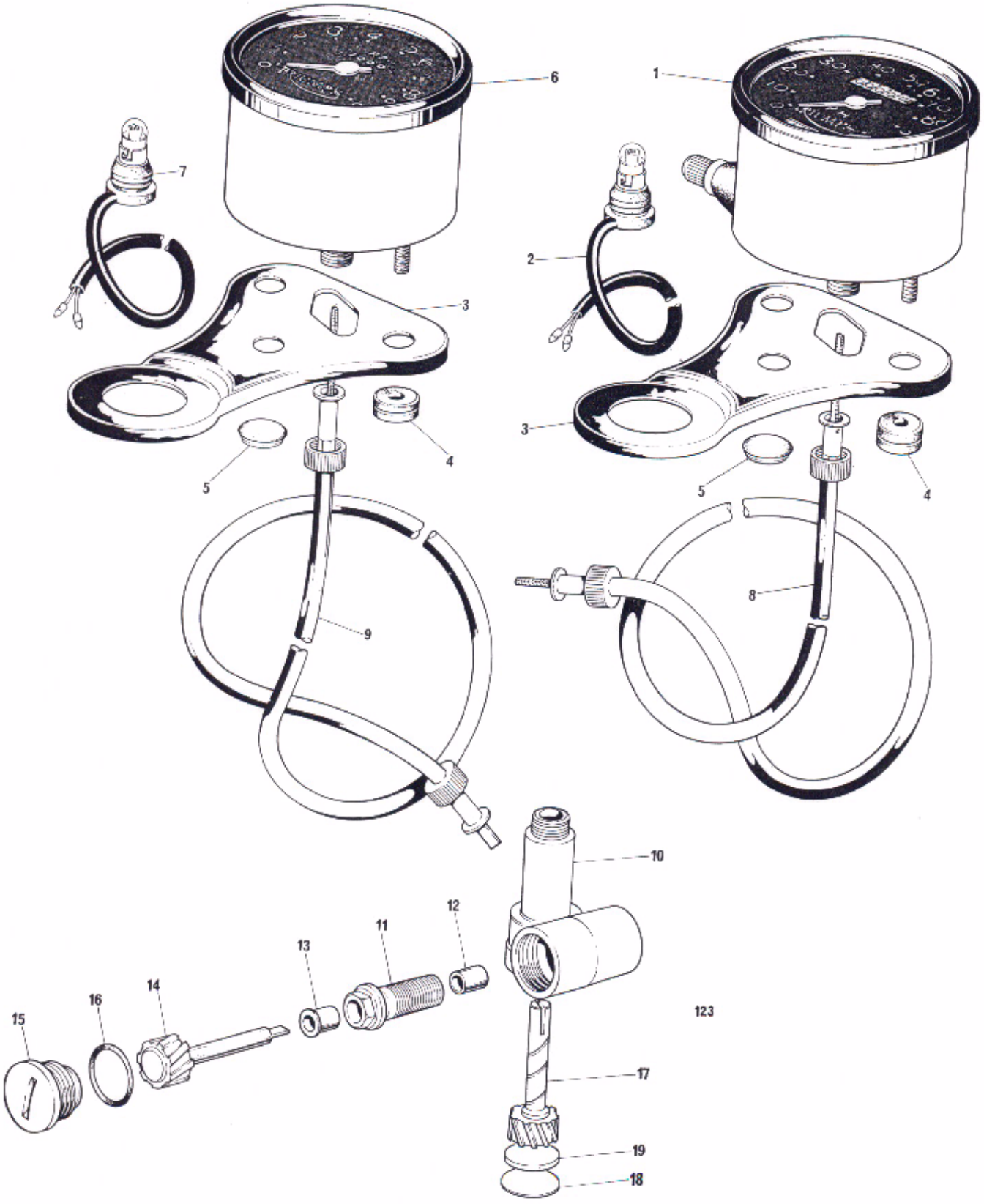

Fig. 24. SPEEDOMETER AND TACHOMETER

SPEEDOMETER AND TACHOMETER

Ref. No.	Part No.	DESCRIPTION	QUANTITY	REMARKS
1	NS5338	SPEEDOMETER HEAD MPH. (60–4009)	1	
2	60–4000	Bulbholder	1	
3	97–4529	Mounting bracket	2	
4	60–4106	Rubber grommet	4	
5	60–4137	Blind grommet	2	
6	NS5339	TACHOMETER HEAD (60–4099)	1	
7	60–4000	Bulbholder	1	
8	60–3997	Speedometer cable	1	
9	60–3998	Tachometer cable	1	
10	71–2476	TACHOMETER GEARBOX	1	
11	70–9332	SECURING SCREW	1	
12	70–5156	Bush	Reference only	
13	70–5155	Flanged bush	Reference only	
14	70–5157	Driving gear	1	
15	71–2480	End cap	1	
16	60–3355	'O' ring	1	
17	71–2653	Driven gear	1	
18	71–2481	Welch washer	1	
19	71–2482	Spacer	1	
Not illus.	70–7351	Sealing washer	1	

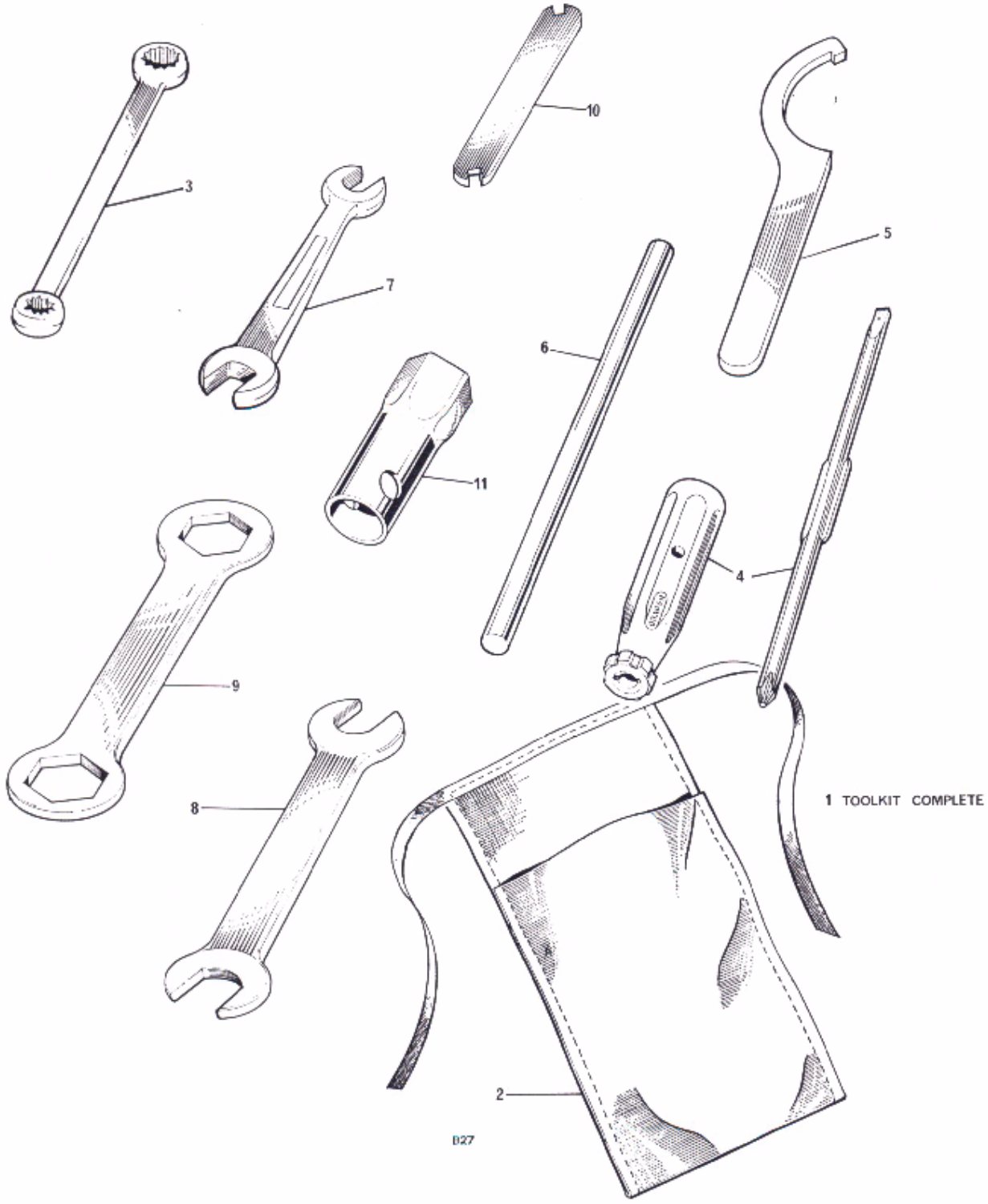

Fig. 25. TOOL KIT

Ref. No.	Part No.	DESCRIPTION	QUANTITY	REMARKS

TOOL KIT

1	60–4191	TOOL KIT COMPLETE	1
2	60–0291	Tool roll	1
3	60–1907	Ring spanner	1
4	60–0767	Screwdriver	1
5	60–2184	'C' spanner	1
6	60–1911	Tommy bar	1
7	60–2084	Open ended spanner	1
8	60–0016	Open ended spanner	1
9	60–3647	Ring spanner	1
10	60–2185	Tappet spanner	1
11	60–0087	Plug spanner	1

STANDARD HARDWARE SPECIFICATION

BOLTS

Part No.	Material	Thd. dia.	Length under head	Min. length of thread	Hexagon A.F.
21–1822	Steel	5/16" UNF	1/2"	27/64"	0.500"
21–1910	,,	3/8" UNF	13/16"	13/16"	0.565"
21–1919	,,	5/16" UNC	1 5/8"	7/8"	0.500"
21–2010	,,	1/4" UNF	13/16"	3/8"	0.375"
14–0101	,,	1/4" UNF	1/2"		0.438"
14–0102	,,	1/4" UNF	5/8"		0.438"
14–0103	,,	1/4" UNF	3/4"		0.438"
14–0113	,,	5/16" UNF	5/8"		0.500"
14–0114	,,	5/16" UNF	3/4"		0.500"
14–0115	,,	5/16" UNF	7/8"		0.500"
14–0128	,,	3/8" UNF	1"		0.563"
14–0208	,,	1/4" UNF	2 1/4"	3/4"	0.438"
14–0216	,,	5/16" UNF	1 1/8"	7/8"	0.500"
14–0217	,,	5/16" UNF	1 1/4"	7/8"	0.500"
14–0219	,,	5/16" UNF	1 1/2"	7/8"	0.500"
14–0220	,,	5/16" UNF	1 3/4"	7/8"	0.500"
14–0225	,,	5/16" UNF	3"	7/8"	0.500"
14–0228	,,	5/16" UNF	4"	7/8"	0.500"
14–0234	,,	3/8" UNF	1 3/4"	1"	0.563"
14–0236	,,	3/8" UNF	2 1/4"	1"	0.563"
14–0239	,,	3/8" UNF	3"	1"	0.563"
14–0240	,,	3/8" UNF	3 1/4"	1"	0.563"
14–0242	,,	3/8" UNF	4"	1"	0.563"
14–0251	,,	7/16" UNF	2 3/4"	1 1/4"	0.625"
14–6102	,,	1/4" UNC	5/8"		0.438"
14–6115	,,	5/16" UNC	7/8"		0.500"

NUTS

Part No.	Material	Thd. dia.	Hexagon A.F.	Thickness	Remarks
21–0778	Steel	No. 10 UNF	0.375"	0.225"	Cleveloc
21–1852	,,	5/16" UNF	0.437"	0.330"	Philidas
21–1906	,,	1/4" UNF	0.438"	0.188"	Plain
21–1908	,,	5/16" UNF	0.438"	0.313"	Plain
21–1914	,,	3/4" UNEF	1.125"	0.250"	Plain
21–2012	,,	7/8" UNEF	1.313"	0.438"	Plain
21–2013	,,	3/4" UNEF	1.313"	0.313"	Plain
21–2014	,,	3/4" UNEF	1.313"	0.438"	Plain
14–0301	,,	1/4" UNF	0.438"	0.224"	Plain
14–0302	,,	5/16" UNF	0.500"	0.271"	Plain
14–0401	,,	1/4" UNF	0.438"	0.161"	Lock
14–0402	,,	5/16" UNF	0.500"	0.192"	Lock
14–0403	,,	3/8" UNF	0.563"	0.224"	Lock
14–0701	,,	1/4" UNF	0.438"	0.203"	Philidas
14–0702	,,	5/16" UNF	0.500"	0.246"	Philidas
14–0703	,,	3/8" UNF	0.563"	0.296"	Philidas
14–1201	,,	1/4" UNF	0.438"	0.285"	Stiffnut
14–1202	,,	5/16" UNF	0.500"	0.335"	Stiffnut
14–1301	,,	1/4" UNF	0.438"	0.245"	Stiffnut
14–1302	,,	5/16" UNF	0.500"	0.290"	Stiffnut
14–1303	,,	3/8" UNF	0.563"	0.320"	Stiffnut
14–1304	,,	7/16" UNF	0.688"	0.375"	Stiffnut
14–1305	,,	1/2" UNF	0.750"	0.435"	Stiffnut
14–1902	,,	5/16" UNF	0.500"	0.361"	Nyloc
14–1903	,,	3/8" UNF	0.563"	0.375"	Nyloc

SCREWS

Part No.	Type of head	Material	Thd. dia.	Length under head	Type of drive
21–1916	Cheese head	Steel	$\frac{1}{4}$" UNC	$1\frac{1}{8}$"	Cross recess
21–1917	Cheese head	,,	$\frac{1}{4}$" UNC	$2\frac{5}{8}$"	Cross recess
21–1918	Cheese head	,,	$\frac{1}{4}$" UNC	$2\frac{3}{8}$"	Cross recess
21–1920	Hex. head	,,	$\frac{1}{4}$" UNC	$\frac{21}{64}$"	
21–1929	Countersunk (82°)	,,	$\frac{1}{4}$" UNC	$\frac{17}{32}$"	Slot
21–2079	Cheese head	,,	No. 10 UNF	$\frac{1}{2}$"	Pozidrive
14–0604	Cheese head	,,	$\frac{1}{4}$" UNF	$\frac{1}{2}$"	Cross recess
14–6505	Countersunk (82°)	,,	$\frac{1}{4}$" UNC	$\frac{7}{8}$"	Cross recess
14–6607	Cheese head	,,	$\frac{1}{4}$" UNC	$\frac{7}{8}$"	Cross recess
14–6608	Cheese head	,,	$\frac{1}{4}$" UNC	1"	Cross recess
14–6609	Cheese head	,,	$\frac{1}{4}$" UNC	$1\frac{1}{4}$"	Cross recess
14–7019	Socket head	,,	$\frac{5}{16}$" UNC	$\frac{7}{8}$"	Hex. socket
14–7024	Socket head	,,	$\frac{5}{16}$" UNC	2"	Hex. socket

WASHERS—PLAIN

Part No.	Material	i/dia.	o/dia.	Thickness
60–4245	Steel	0.273"	0.563"	0.048"
60–4246	Steel	0.398"	0.750"	0.063"
60–4247	Steel	0.336"	0.625"	0.063"
37–2027	Steel	0.531"	1.031"	0.092"
60–4248	Steel	0.266"	0.469"	0.064"

WASHERS—SPRING

Part No.	Material	i/dia.	o/dia.	o/a height	Thickness
60–4259	Spring Steel	$\frac{3}{8}$" clearance	$\frac{19}{32}$"	$\frac{7}{32}$"	0.104"
60–4250	,, ,,	$\frac{1}{4}$" clearance	$\frac{13}{32}$"	$\frac{3}{16}$"	0.064"
60–3541	,, ,,	$\frac{17}{32}$"	$\frac{7}{8}$"	$\frac{7}{32}$"	0.040**
21–0648	,, ,,	$\frac{5}{16}$" clearance	$\frac{1}{2}$"	$\frac{5}{32}$"	0.080"

** Double coil.